FUNCTION

NEW FEATURE & OPTION

OCR

Open-bath Compression Rebound

Option available for : TITAN, F1RST, M-29, VOGUE

A²

Air Square

Option available for : All models. (except , R1, STORM, SPACE, CORSA)

RL

Remote Lock-out

Option available for : OMEGA, GILA PRO, GILA, VITA, TR PRO, NEON, SOFI, TRENDY

TnL

Hydraulic Lock-out

Option available for : OMEGA, GILA PRO, GILA, VITA, TR PRO, NEON, SOFI, TRENDY

RA

Hydraulic Rebound adjust

Option available for : OMEGA, LAUNCH, GILA PRO, GILA

ML

Mechanical Lock-out

Option available for : GILA, CAPA, NEON, SOFI, TRENDY

P

Pre-load

Option available for : All models. (except , R1, STORM, SPACE, CORSA)

ASR

Automatic Secondary Retention

Option available for : M29, GILA PRO, GILA, CAPA 26", NEON 700C, SOFI 700C, 191, 777

OCR : OCR system provides the rider a wide range of choice to adjust the damping performance to adapt to the different terrain. The "build-in" hydraulic design which not only offer light-weight feature, but also sensitive feedback from the fork. Externally adjustable compression, lock-out and rebound circuitry were all equipped for riders to set their own riding attitude.

A² : The improved A² system take advantage of the elaborated air valve to fill the air chamber for air-preload function. In addition to the light-weight feature, the A2 systems which also provide the fork have rapid and smooth performance.

RL : Hydraulic "Remote Lock-out" system, which provide an easy way to use lock-out function from handle bar. The new "RL", it also let the rider be able to adjust the fork's compression slower or faster.

TnL : Hydraulic "Turn & Lock-out". By using new design lever to adjust the fork's compression from fast to slow gradually, then till lock-out position in the end. A secure device will open the oil pressure circuit automatically under suddenly highly impact. Then, return to lock-out condition again by itself within seconds when the pressure released entirely.

RA : Hydraulic "Rebound Adjust"system. Offering the widest range of damping adjustability, control how you want the fork to perform.

ML : "Mechanical Lock-out" system. Lock the fork easily and rapidly at any travel.

P : spring pre-load system . According to the rider's weight or riding style, the rider be able to use the externally adjuster to make the spring stiff or soft to adapt to the vary kinds of demand.

ASR : Ramps on drop for Montague "CLIX" wheel retention system.

ADJUSTMENT ..... A : Air, R : Rebound-Damping, L : Lock-out, P : Pre-load, C : Compression

Content

FUNCTION 01
OVERVIEW 03
COLOR CHART 04
EXTREME
SIGMA 07
R1 09
STORM SERIES 11
TITAN SERIES 13
DIRT JUMP
SPACE SERIES 17
LAUNCH SERIES 19
SPORT
FRIST SERIES 23
M-29 SERIES 25
OMEGA SERIES 27
GILA PRO SERIES 29
GILA SERIES 31
CAPA SERIES 33
CAPA-20 SERIES 35
CROSS & TREKKING
VOGUE SERIES 39
VITA 41
NEON SERIES 43
TR-PRO SERIES 45
SOFI SERIES 47
TRENDY SERIES 49
CORSA SERIES 51
OMNI
191 SERIES 55
777 SERIES 57
790 SERIES 59
ACCESSARY 61
OEM INFORMATION 62
THE DIMENSION OF RL &TOOL 63
DIMENSION FOR TIRE & ROTOR ASSEMBLY 64
PRODUCTS SPECIFICATION ... 65

08' RST

PRODUCT OVERVIEW & COLOR CHART

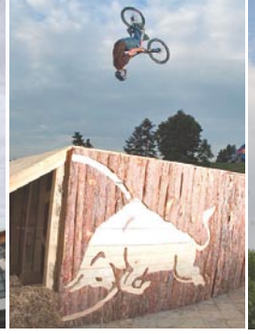

PRODUCT OVERVIEW

	Downhill	Freeride	All Mountain	Cross country	Dirt jump	Cross	Trekking	Fitness
$$$$	SIGMA							
	R1							
$$$		STORM			SPACE	VOGUE		CORSA
			TITAN					
				FIRST				
				M29				
$$				OMEGA	LAUNCH	VITA	TR PRO	
				GILA PRO		NEON	SOFI	
				GILA			TRENDY	
				CAPA				
$				191		777	790	

COLOR CHART

DK-0012 PEARL WHITE	DK-1011 RST RED	DK-3051 BUTTER YELLOW	DK-4062 GREEN	DK-5092 LAKE BLUE	DK-5092 ROYAL BLUE	DK-8011 GLOSS BLACK	DK-9032 GLOSS SILVER	DK-9102 GUN GRAY
*Only RST standard color acceptable	DK-1041 PINK	DK-4052 STONE GREEN	DK-4072 OILVE GREEN	DK-5102 GRAY BLUE	DK-5122 DARK BLUE	DK-8010 MATT BLACK	DK-9110 MATT SILVER	DK-9122 CHAMPAGNE

1. The RST forks are only available with the corresponding colors
2. Sigma is only available in black anodized
3. The above mentioned colors are for ordering purpose only. Please refer to RST's paint samples for actual colors.

DH EXTREME
Free ride
All mountain

Down hill : Extremely tough riding style for highly skilled rider who get the thrill to ride on particular steep descent. The fork for dh category needs long travel, durability and superb hydraulic performance.

Free ride : In this riding style, the riders are not only to enjoy the fun from descent riding, but also need to perform their jumping skill to over obstacles. The fork for freeride style needs 170mm travel at least and durable structure to dominate any tough trails, as well.

All mountian : Riding for long distance ascent/descent trail. The front fork for enduro category emphasized light weight, multi-function and long travel performance.

DOWN HILL

SIGMA

2007	VS.	2008	Remark
SIGMA		SIGMA	NO CHANGE

SIGMA

Hydraulic Rebound adjust

Hydraulic Pre-Load adjust

Air System

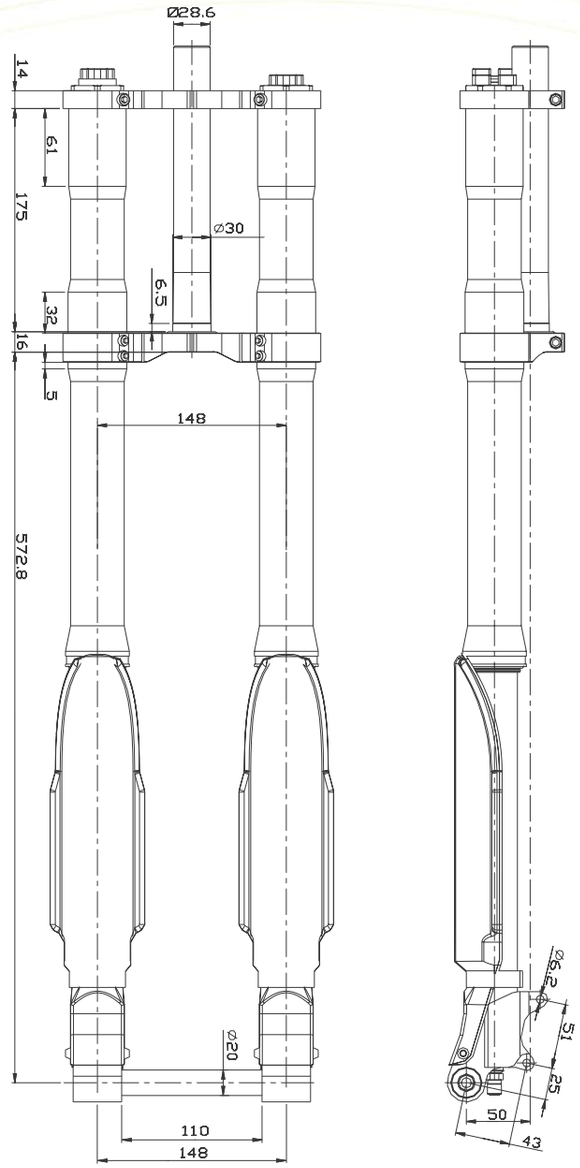

SPEC	
STEERER	28.6mm Aluminum 7050
CROWN	Aluminum ,Satin Black
CROWN PITCH	148mm-**Daul**
STANCHION	36mm Aluminum 7050 , Hard Anodize
OUTER LEG	CNC machined Aluminum
SPRING SYSTEM	Oil /Air (R) , Air / Coil (L)
FEATURES	Hydraulic **Adjust-Rebound** with **Air**
ADJUSTMENT	A, R, P
TRAVEL	8" (203 mm)
WEIGHT(W/O STEERER)	3.60kg

20mm THROUGH AXLE

*** Lower: Disc only**

A : Air, R : Rebound-Damping, P : Pre-load

DOWN HILL

R I

2007	VS.	2008	Remark
R1		R1	NEW CASTING, IMPROVED HYDRAULIC SYSTEM EQUIPPED

R1

RA

Hydraulic
Rebound adjust

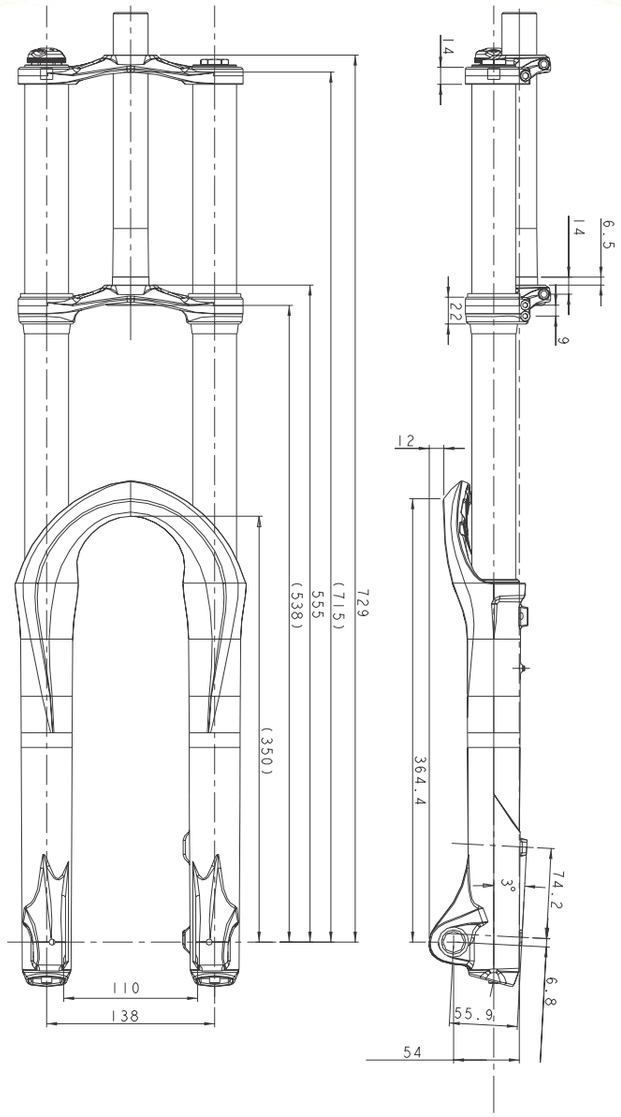

SPEC	
STEERER	28.6mm Aluminum 7050
CROWN	Aluminum ,Satin Black
CROWN PITCH	138mm-**DUAL**
STANCHION	36mm Aluminum 7050 ,Hard Anodize
OUTER LEG	Magnesium
SPRING SYSTEM	Oil (R) , Coil/MCU (L)
FEATURES	Hydraulic **Adjust-Rebound**
ADJUSTMENT	R
TRAVEL	180 mm
WEIGHT(W/O STEERER)	2.60kg

20mm Aluminum THROUGH AXLE
*** Lower: Disc only (post mount)**
R : Rebound-Damping

FREE RIDE

STORM SERIES

2007		2008	Remark
STORM SUPER	VS.	STORM SUPER	NEW CASTING, IMPORVED HYDRAULIC SYSTEM EQUIPPED
STORM FLOW		–	DISCONTINUE

STORM - SUPER

RA

Hydraulic
Rebound adjust

TA

QR

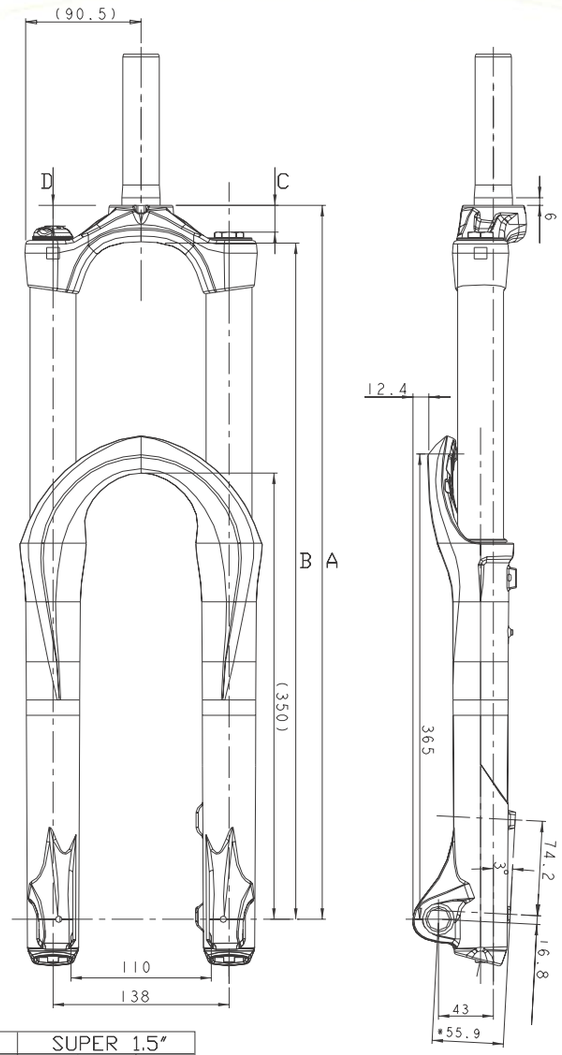

	SUPER			SUPER 1.5"		
	140	160	180	140	160	180
A	520	540	560	520	540	560
B	492	512	532	492	512	532
C	20	20	20	20	20	20
D	14	14	14	14	14	14

SPEC	Super 1.5" TA or QR	Super TA or QR
STEERER	1.5" 7050 Aluminum	28.6mm Cr-mo steel
CROWN	Aluminum , Satin Black	
CROWN PITCH	138mm	
STANCHION	36mm Cr-mo steel , Ti color	
OUTER LEG	Magnesium	
SPRING SYSTEM	Oil (R) , Coil/MCU (L)	
FEATURES	Hydraulic **Adjust-Rebound**	
ADJUSTMENT	R	
TRAVEL	140, 160, 180MM	
WEIGHT(W/O STEERER)	2.74 kg	2.7 kg

*** Lower: Disc only (post mount)**
R :Rebound-Damping

TA :20mm Aluminum thru axle
QR :Adapter for Quick Release

EN-DURO

TITAN SERIES

2007		2008	Remark
RAPIDE AIR RL	VS.	TITAN AIR RL	NEW NAME, OCR & A2 SYSTEM EQUIPPED.
RAPIDE AIR		TITAN AIR RL	NEW NAME, OCR & A2 SYSTEM EQUIPPED.
RAPIDE ELITE		–	DISCONTINUE
–		TITAN PRO RL	NEW NAME, OCR SYSTEM EQUIPPED
–		TITAN PRO	NEW NAME, OCR SYSTEM EQUIPPED

TITAN - AIR

RL

Remote Lock-out

OCR

Hydraulic Lock-out

Turn & Lock

A²

Air Square

OCR

Hydraulic Rebound adjust

P

Preload

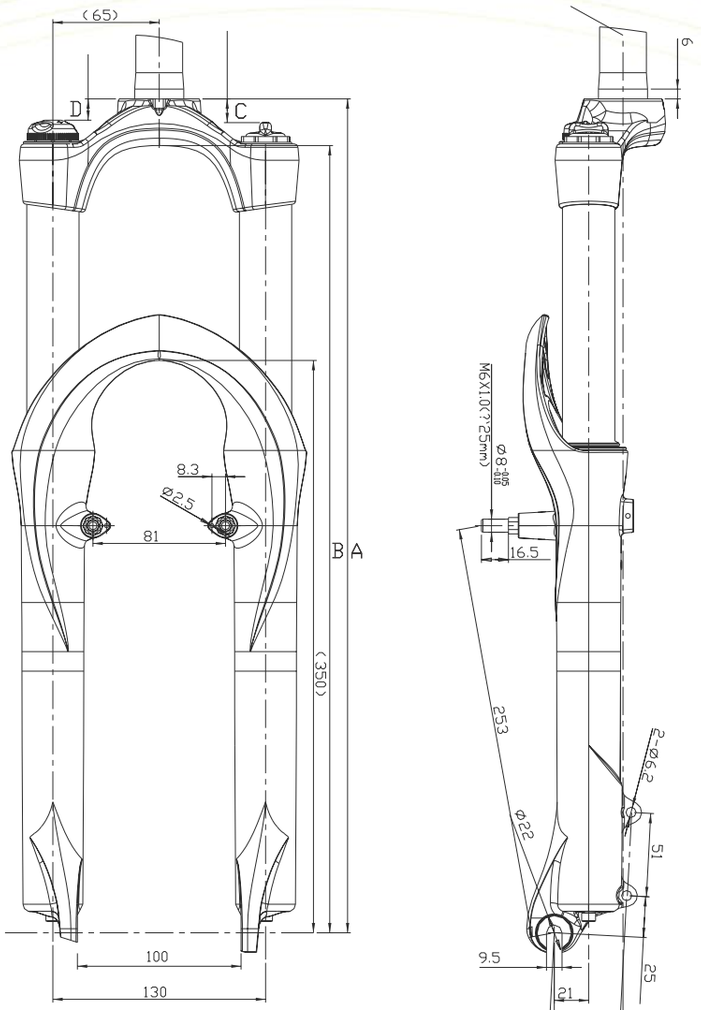

	AIR-RL		AIR		PRO-RL		PRO	
	100	130	100	130	100	130	100	130
A	480	510	480	510	480	510	480	510
B	450	480	450	480	450	480	450	480
C	14	14	14	14	14.5	14.5	14.5	14.5
D	10	10	12	12	12.5	12.5	12.5	12.5

SPEC	Air-RL	Air	Pro-RL	Pro
STEERER	28.6mm Aluminum 7050		28.6mm Cr-mo steel	
CROWN	Aluminum , Satin Black			
CROWN PITCH	130mm			
STANCHION	32mm Aluminum 7050 , hard Anodize			
OUTER LEG	Magnesium			
SPRING SYSTEM	Oil (R) , Air (L)		Oil (R) , Coil spring/MCU (L)	
FEATURES	Hydraulic **Adjust-Rebound, Air Spring**		Hydraulic **Adjust-Rebound**	
	Rempte Lock-out	**Lock-out**	**Rempte Lock-out**	**Lock-out**
ADJUSTMENT	A, R, RL, C	A, R, L, C	R, RL, C, P	R, L, C, P
TRAVEL	100,130 mm			
WEIGHT(W/O STEERER)	1.75 kg	1.69 kg	1.90 kg	1.84 kg

*** Lower: Disc only / Disc & V-brake**

A : Ai r, R : Rebound-Damping, RL : Remote Lock-out, L : Lock-out, C : Compression , P : Pre-load

DIRT JUMP Free Style

Develop from “BMX” riding style with 26” wheel. It required most skilled rider to perform tricks over concrete obstacle. The forks for “Dirt Jump” bike need durable structure, shorter travel and hi performance hydraulic system.

DIRT JUMP

SPACE SERIES

2007		2008	Remark
SPACE JUMP	vs.	SPACE JUMP	NEW CROWN, IMPROVED HYDRAULIC SYSTEM EQUIPPED
SPACE FREE		SPACE FREE	NEW CROWN, IMPROVED HYDRAULIC SYSTEM EQUIPPED

SPACE - JUMP(TA)

RA

Hydraulic Rebound adjust

A²

Air Square

QR

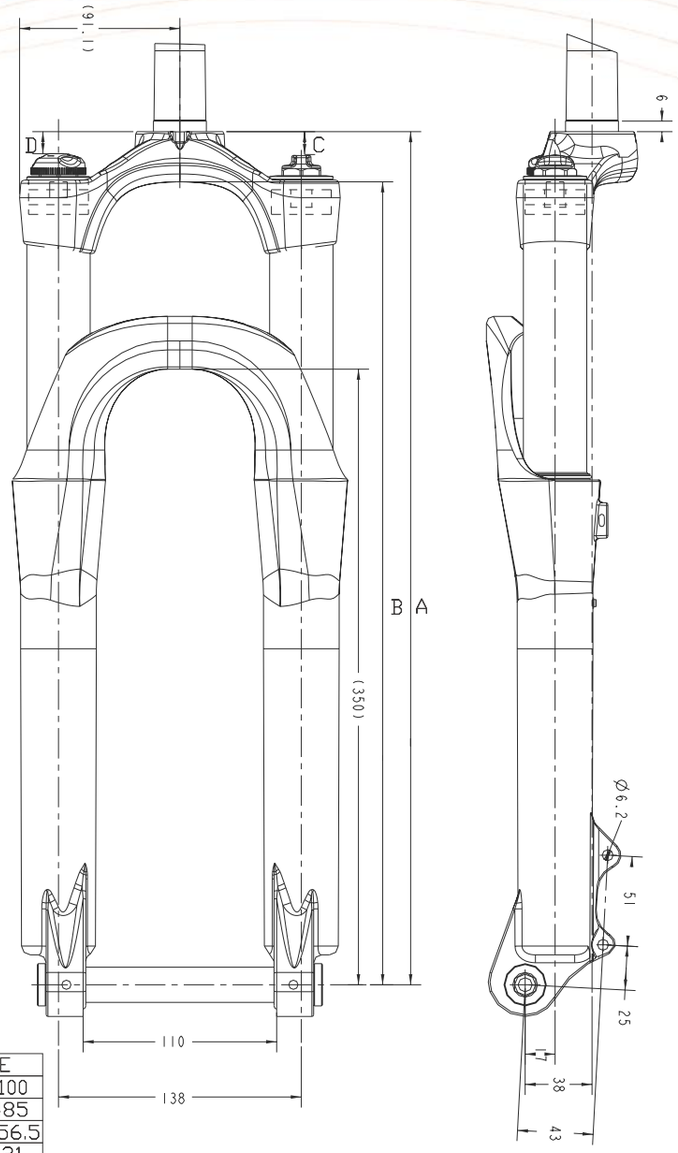

	JUNP		FREE	
	80	100	80	100
A	465	485	465	485
B	436.5	456.5	436.5	456.5
C	13	13	21	21
D	12.5	12.5	12.5	12.5

SPEC	Jump - TA or QR	Free - TA or QR
STEERER	28.6mm Aluminum 7050	28.6mm Cr-mo steel
CROWN	Aluminum , Satin Black	
CROWN PITCH	138mm	
STANCHION	36mm Aluminum 7050, Hard Anodize	36mm Cr-mo steel, Ti color
OUTER LEG	Magnesium	
SPRING SYSTEM	Oil (R),Air (L)	Oil (R), Coil/MCU (L)
FEATURES	Hydraulic **Adjust-Rebound** with **Air**	Hydraulic **Adjust-Rebound**
ADJUSTMENT	A, R	R
TRAVEL	80, 100 mm	
WEIGHT(W/O STEERER)	2.28kg	2.6kg

*** Lower: Disc only**

A : Ai r, R : Rebound-Damping

TA :20mm Aluminum thru axle

QR :Adapter for Quick Release

DIRT JUMP

LAUNCH SERIES

2007	VS.	2008	Remark
LAUNCH RA		LAUNCH RA	NO CHANGE
LAUNCH T7		LAUNCH T8	NO CHANGE

LAUNCH - RA

RA

Hydraulic
Rebound adjust

P

Preload

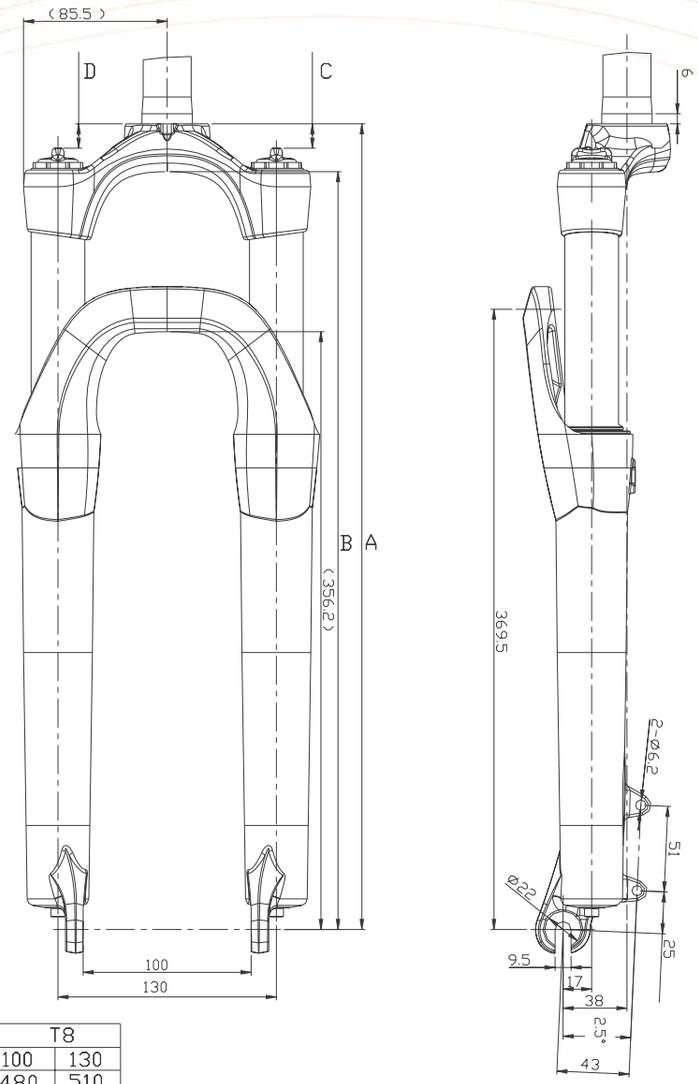

	RA		T8	
	100	130	100	130
A	480	510	480	510
B	451.5	481.5	451.5	481.5
C	14.5	14.5	14.5	14.5
D	12.5	12.5	12.5	12.5

SPEC	RA	T8
STEERER	28.6/25.4	
CROWN	Aluminum ,Satin Black	
CROWN PITCH	130mm	
STANCHION	32 steel, Ti-color	
OUTER LEG	Aluminum	
SPRING SYSTEM	Oil(R),Coil /MCU(L)	Coil / MCU
FEATURES	Hydraulic **Adjust-Rebound**	
ADJUSTMENT	R, P	P
TRAVEL	100,130 mm	
WEIGHT(W/O STEERER)	2.4kg	2.37kg

* **Lower: Disc only / Disc & V-brake**
R : Rebound, P : Pre-load

MTB XC

SPORT

Cross country (XC) : For off-road riding along the mountain trails which contains some smaller obstacles and bumps. The front fork request light weight, well performance and maximum 80mm travel equipped.

XC

FIRST SERIES

2007		2008	Remark
MEGAAN AIR RL	VS.	F1RST AIR RL	NEW NAME, NEW CROWN, OCR & A2 SYSTEM EQUIPPED
MEGAAN AIR		F1RST AIR	NEW NAME, NEW CROWN, OCR & A2 SYSTEM EQUIPPED
–		F1RST PRO RL	NEW CROWN, IMPROVED HYDRAULIC SYSTEM EQUIPPED
–		F1RST PRO	NEW CROWN, IMPROVED HYDRAULIC SYSTEM EQUIPPED

FIRST - AIR

RL

Remote Lock-out

OCR

Hydraulic Lock-out

Turn & Lock

A²

Air Square

OCR

Hydraulic Rebound adjust

P

Preload

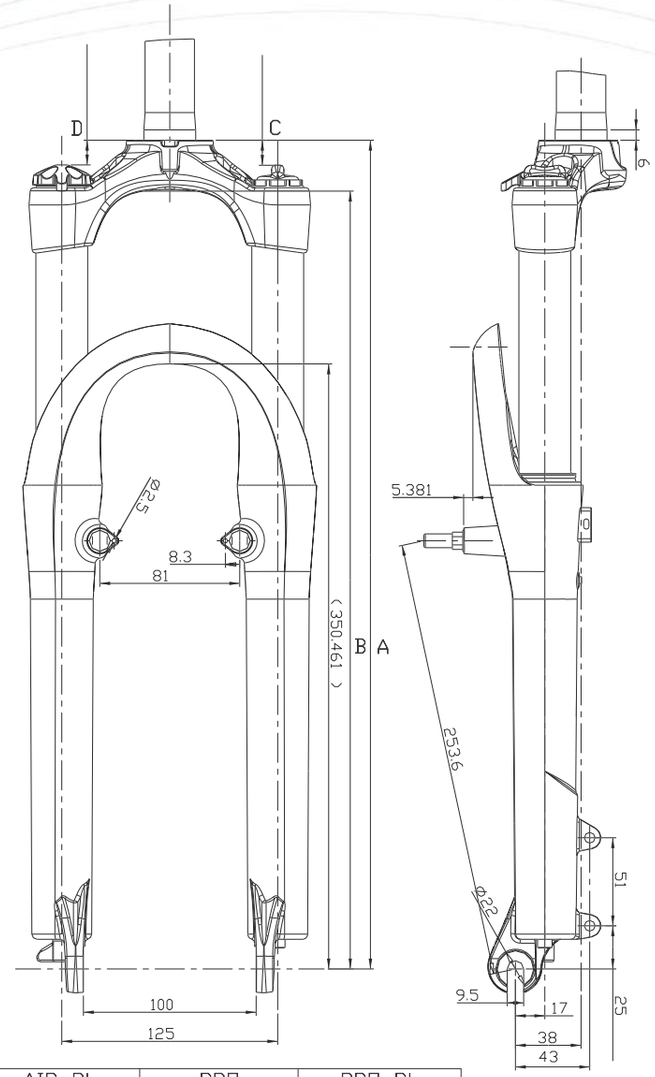

	AIR		AIR RL		PRO		PRO RL	
	100	130	100	130	100	130	100	130
A	460	480	460	480	460	480	460	480
B	430	450	430	450	430	450	430	450
C	14	14	14	14	14.5	14.5	14.5	14.5
D	10	10	12	12	12.5	12.5	12.5	12.5

SPEC	Air-RL	Air	Pro-RL	Pro
STEERER	28.6mm Aluminum 7050		28.6mm Cr-mo	
CROWN	Aluminum ,Satin Black			
CROWN PITCH	125mm			
STANCHION	30mm Aluminum 7050 , hard anodize			
OUTER LEG	Magnesium			
SPRING SYSTEM	Oil (R) , Air (L)		Oil (R) ,Coil / MCU (L)	
FEATURES	Hydraulic **Adjust-Rebound** with **Air**		Hydraulic **Adjust-Rebound**	
	RemoteLock-out	**Lock-out**	**RemoteLock-out**	**Lock-out**
ADJUSTMENT	A, R, RL, C	A, R, L, C	R, RL, C, P	R, L, C, P
TRAVEL	80, 100 mm			
WEIGHT(W/O STEERER)	1.58kg	1.52kg	1.73kg	1.67kg

* **Lower: Disc only / Disc & V-brake**

A : Air, R : Rebound-Damping, RL : Remote Lock-out, L : Lock-out, C : Compression, P : Pre-load

29"

M-29 SERIES

2007		2008	Remark
–	VS.	F1RST AIR RL	NEW MODEL, OCR & A2 SYSTEM EQUIPPED
–		F1RST AIR	NEW MODEL, OCR & A2 SYSTEM EQUIPPED
–		F1RST PRO RL	NEW MODEL, OCR SYSTEM EQUIPPED
–		F1RST PRO	NEW MODEL, OCR SYSTEM EQUIPPED

M29 - AIR

RL

Remote Lock-out

OCR

Hydraulic Lock-out

Turn & Lock

A²

Air Square

OCR

Hydraulic Rebound adjust

P

Preload

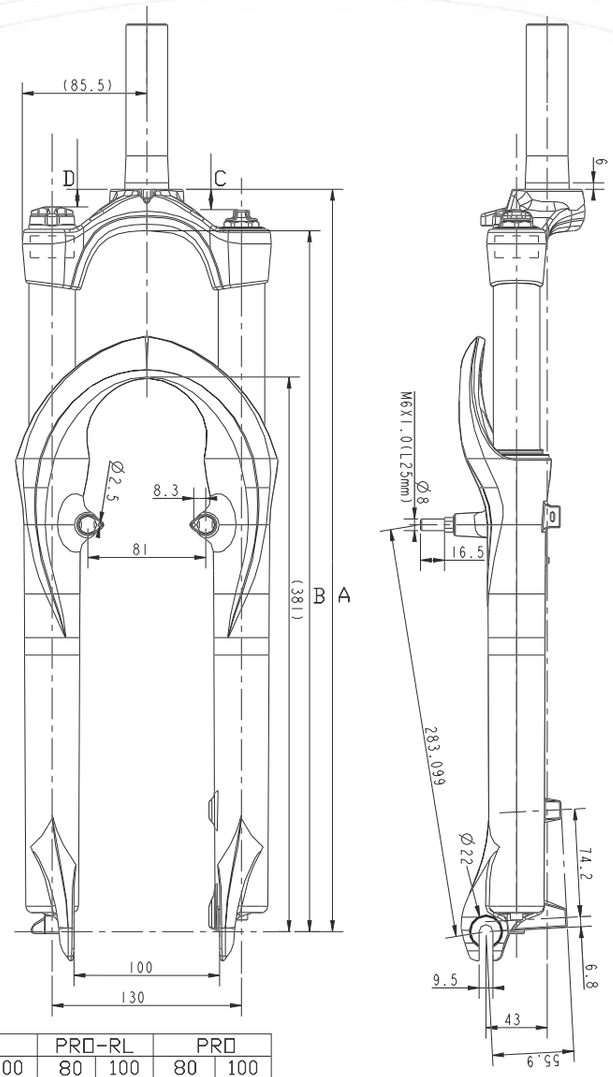

	AIR-RL		AIR		PRO-RL		PRO	
	80	100	80	100	80	100	80	100
A	490	510	490	510	490	510	490	510
B	461.5	481.5	461.5	481.5	461.5	481.5	461.5	481.5
C	14	14	14	14	14.5	14.5	14.5	14.5
D	10	10	12	12	10	10	12.5	12.5

SPEC	Air-RL	Air	Pro-RL	Pro
STEERER	28.6mm Aluminum 7050		28.6mm Cr-mo	
CROWN	Aluminum ,Satin Black			
CROWN PITCH	130mm			
STANCHION	32mm Aluminum 7050 , Hard Anodize			
OUTER LEG	Magnesium			
SPRING SYSTEM	Oil (R) , Air (L)		Oil (R) ,Coil / MCU (L)	
FEATURES	Hydraulic **Adjust-Rebound** with **Air**		Hydraulic **Adjust-Rebound**	
	RemoteLock-out	**Lock-out**	**RemoteLock-out**	**Lock-out**
ADJUSTMENT	A, R, RL, C	A, R, L, C	R, RL, C	R, L, C
TRAVEL	80, 100 mm			
WEIGHT(W/O STEERER)	1.82kg	1.76kg	1.97kg	1.91kg

*** Lower:Disc(Post mount) & V-brake only**

*** ASR drop out for Montague CLIX system**

A : Air, R : Rebound-Damping, RL : Remote Lock-out, L : Lock-out , C : Compression

OMEGA SERIES

XC

OMEGA

2007		2008	Remark
OMEGA RL	VS.	OMEGA RL	NEW CROWN, 30MM BLK STANCHION EQUIPPED
OMEGA TNL		OMEGA TNL	NEW CROWN, 30MM BLK STANCHION QUIPPED, NEW ALLOY TNL LEVER
OMEGA SL		–	DISCONTINUE
OMEGA RA		OMEGA RA	DISCONTINUE
OMEGA T7		OMEGA T8	NEW CROWN, 30MM BLK STANCHION EQUIPPED

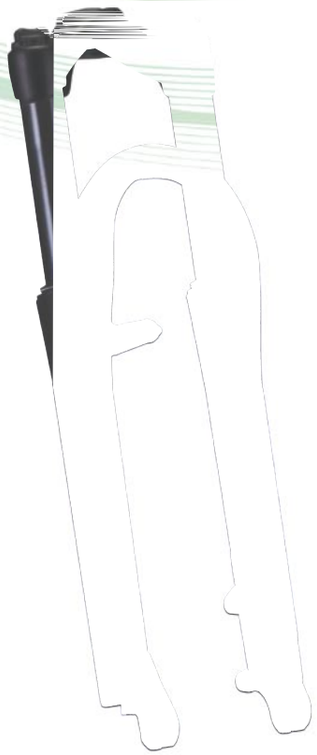

OMEGA - T8

RL

Remote Lock-out

TnL

Hydraulic Lock-out

Turn & Lock

RA

Hydraulic Rebound adjust

P

Preload

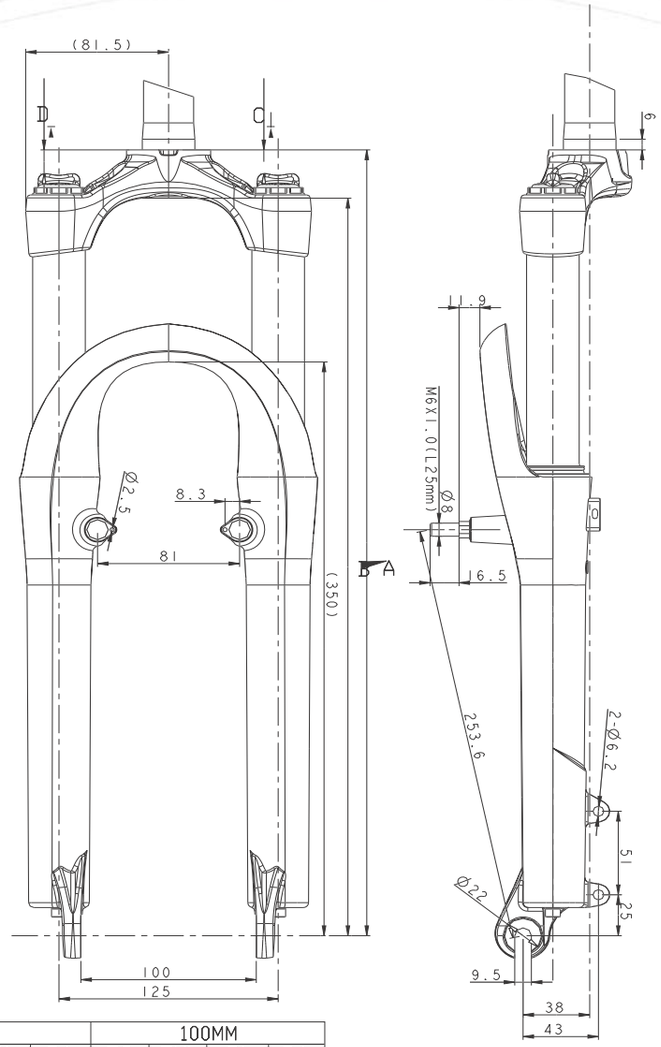

	80MM				100MM			
	T8	TNL	RL	RA	T8	TNL	RL	RA
A	460	460	460	460	480	480	480	480
B	430.5	430.5	430.5	430.5	450.5	450.5	450.5	450.5
C	14.5	14.5	14.5	14.5	14.5	14.5	14.5	14.5
D	14.5	11.9	9.3	11	14.5	11.9	9.3	11

SPEC	RL	TnL	RA	T8
STEERER	28.6/25.4			
CROWN	Aluminum ,Satin Black			
CROWN PITCH	125mm			
STANCHION	30 steel black color			
OUTER LEG	Magnesium			
SPRING SYSTEM	Oil(R),Coil spring/MCU(L)			Coil/MCU
FEATURES	Remote Hydraulic Lock-out	Hydraulic Lock-out	Hydraulic Adjust-Rebound	
ADJUSTMENT	RL,C, P	L, C,P	R, P	P
TRAVEL	80,100 mm			
WEIGHT(W/O STEERER)	2.0kg	1.94kg		1.91kg

*** Lower: Disc only / Disc & V-brake**

RL : Remote Lock-out, R : Rebound-Damping, L : Lock-out, P : Pre-load, C : Compression

MAG

26"

MCU+S.

R

Remote LOCK OUT

TnL Turn & Lock

MTB

GILA PRO SERIES

GILA PRO

2007		2008	Remark
GILA PLUS RL	VS.	GILA PRO RL	NEW CASTING, NEW CROWN, 100/110 MM TRAVEL AVAILABLE
GILA PLUS TNLL		GILA PRO TNL	NEW CASTING, NEW CROWN, NEW ALLOY TNL LEVER100/110 MM TRAVEL AVAILABLE
GILA PLUS SL		–	DISCONTINUE
GILA PLUS RA		GILA PRO RA	NEW CASTING, NEW CROWN, 100/110 MM TRAVEL AVAILABLE
GILA PLUS T7		GILA PRO T8	NEW CASTING, NEW CROWN, 100/110 MM TRAVEL AVAILABLE

GILA PRO - T8

RL

Remote Lock-out

TnL

Hydraulic Lock-out

Turn & Lock

RA

Hydraulic Rebound adjust

P

Preload

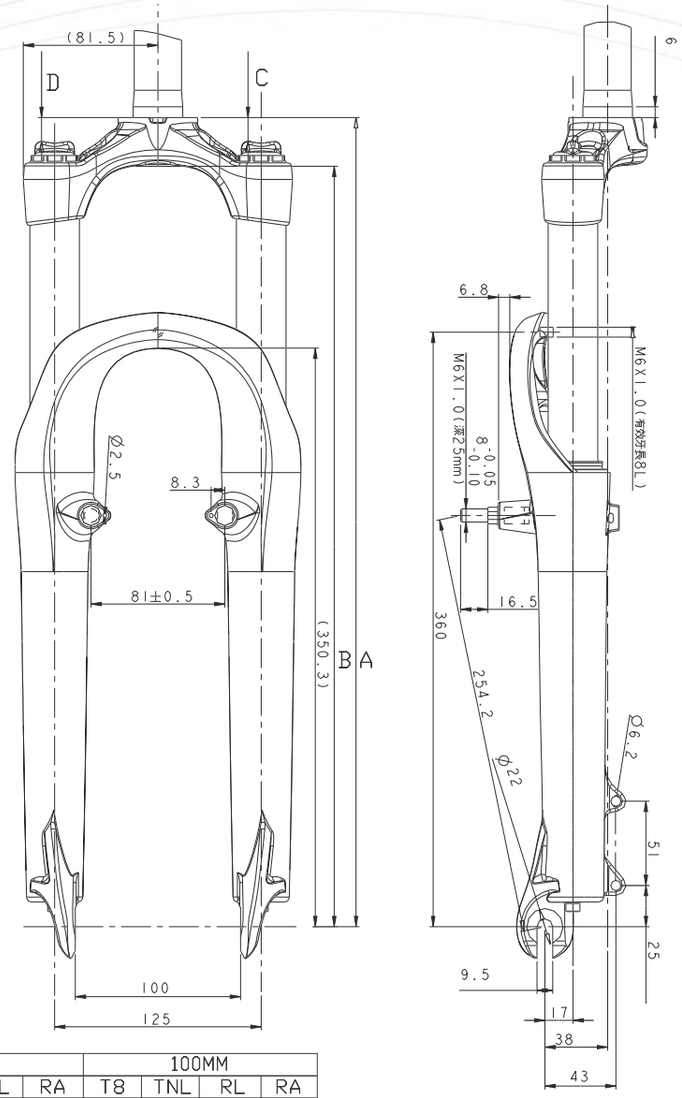

	110MM				100MM			
	T8	TNL	RL	RA	T8	TNL	RL	RA
A	490	490	490	490	480	480	480	480
B	460.5	460.5	460.5	460.5	450.5	450.5	450.5	450.5
C	14.5	14.5	14.5	14.5	14.5	14.5	14.5	14.5
D	14.5	11.9	9.3	11	14.5	11.9	9.3	11

SPEC	RL	TnL	RA	T8
STEERER	28.6/25.4			
CROWN	Aluminum ,Satin Black			
CROWN PITCH	125mm			
STANCHION	30 steel Ti-color			
OUTER LEG	Aluminum			
SPRING SYSTEM	Oil(R),Coil spring/MCU(L)			Coil/MCU
FEATURES	Remote Hydraulic	Hydraulic	Hydraulic	
	Lock-out	**Lock-out**	**Adjust-Rebound**	
ADJUSTMENT	RL,C, P	L, C,P	R, P	P
TRAVEL	100,110 mm			
WEIGHT(W/O STEERER)	2.23kg	2.18kg		2.15kg

*** Lower: Disc only / Disc & V-brake**

*** ASR drop out for Montague CLIX system**

RL : Remote Lock-out , R : Rebound-Damping, L : Lock-out, P : Pre-load, C : Compression

ALU

26"

MCU+S.

R

P

Remote LOCK OUT

TnL Turn & Lock

XC

GILA SERIES

GILA

2007	VS.	2008	Remark
GILA RL		GILA RL	NEW CROWN
GILA TNL		GILA TNL	NEW CASTING, NEW CROWN, NEW ALLOY TNL LEVER
GILA SL		–	DISCONTINUE
GILA RA		GILA RA	NEW CROWN
GILA ML		GILA ML	NEW CROWN
GILA T7		GILA T8	NEW CROWN

GILA- T8

RL

Remote Lock-out

TnL

Hydraulic Lock-out

ML

Mechanical Lock-out

Turn & Lock

RA

Hydraulic Rebound adjust

P

Preload

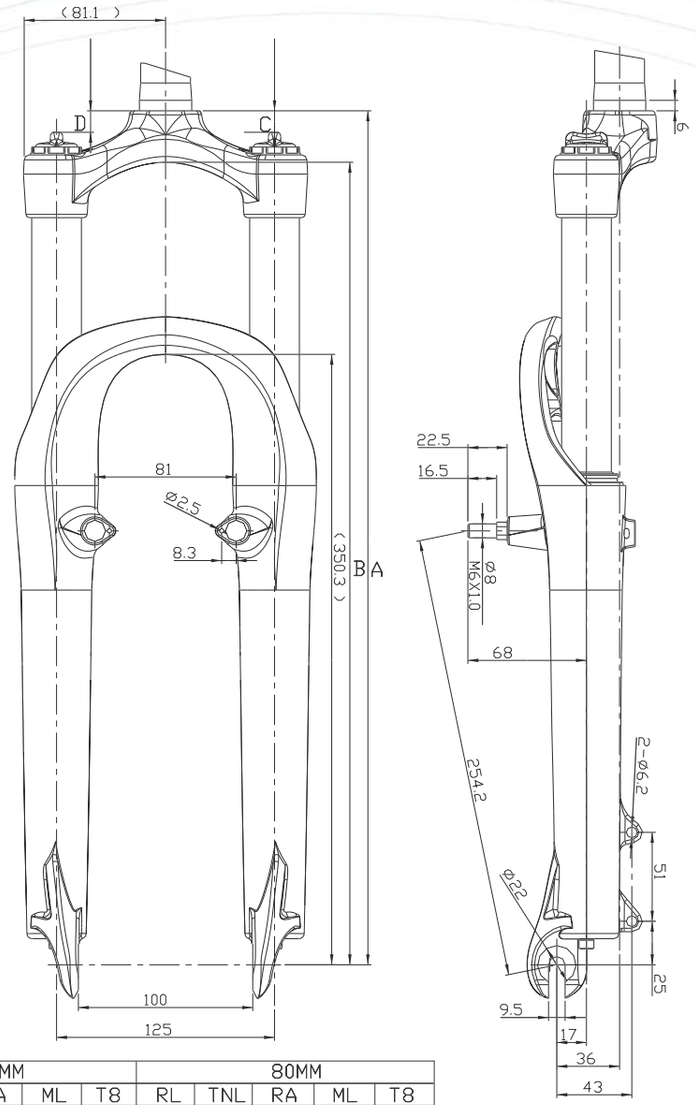

	100MM					80MM				
	RL	TNL	RA	ML	T8	RL	TNL	RA	ML	T8
A	480	480	480	480	480	460	460	460	460	460
B	460.5	460.5	460.5	460.5	460.5	440.5	440.5	440.5	440.5	440.5
C	12.3	12.3	12.3	12.3	12.3	12.3	12.3	12.3	12.3	12.3
D	11	10	10	10	12.3	11	10	10	10	12.3

SPEC	RL	TnL	RA	ML	T8
STEERER	28.6/25.4				
CROWN	Aluminum ,Satin Black , Integrated				
CROWN PITCH	125mm				
STANCHION	28.6mm Ti-color steel				
OUTER LEG	Aluminum				
SPRING SYSTEM	Oil(R),Coil spring/MCU(L)			Coil spring/MCU	
FEATURES	Remote Hydraulic Lock-out	Hydraulic Lock-out	Hydraulic Adjust-Rebound	Mechanical Lock-out	
ADJUSTMENT	RL, P	L, P	R, P	L, P	P
TRAVEL	80,100mm				
WEIGHT(W/O STEERER)	2.18kg		2.13kg	1.90kg	2.10kg

*** Lower: Disc only / Disc & V-brake**

*** ASR drop out for Montague CLIX system**

RL : Remote Lock-out, R : Rebound-Damping, L : Lock-out, P : Pre-load

ALU

26"

MCU+S.

R

P

Remote LOCK OUT

TnL Turn & Lock

SPORT

CAPA SERIES

CAPA

2007		2008	Remark
CAPA ML	VS.	CAPA ML	80MM TRAVEL FOR 26”
CAPA T7		CAPA T8	80MM TRAVEL FOR 26”
CAPA C7		CAPA C8	80MM TRAVEL FOR 26”

ALU

26”

24”

LOCK OUT

MCU+S.

SPRING

P

CAPA - ML

ML

Mechanical Lock-out

P

Preload

Fender mount

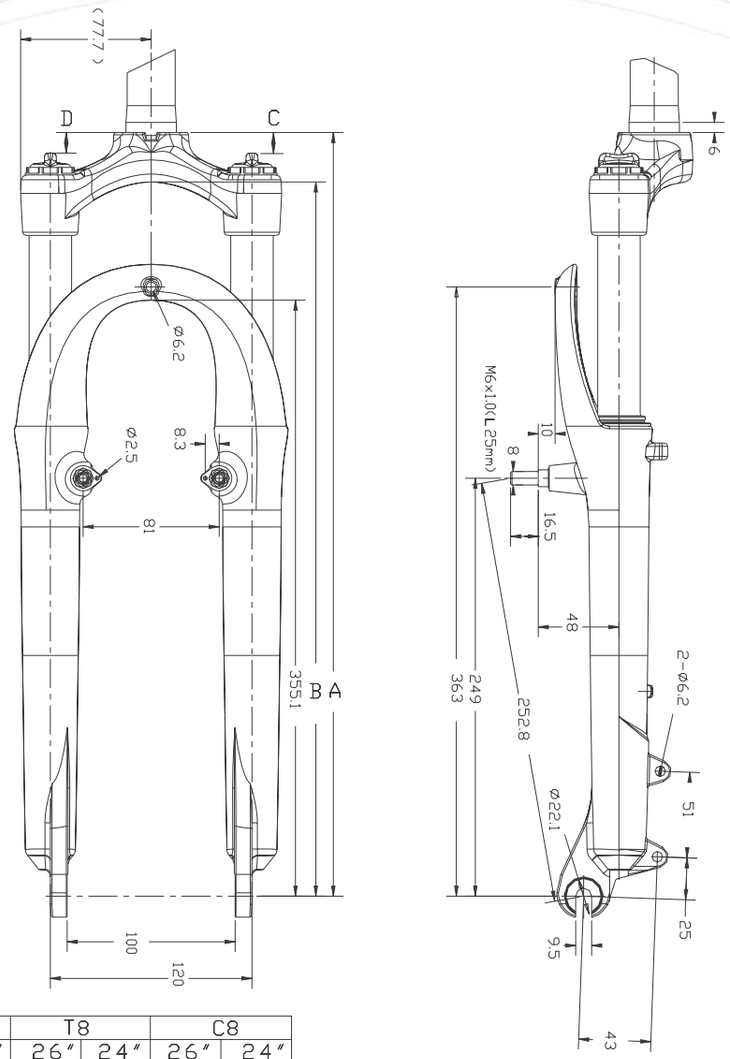

	ML		T8		C8	
	26″	24″	26″	24″	26″	24″
A	460	399	460	399	460	399
B	423	370	423	370	423	370
C	13	13	13	13	13	13
D	13	13	13	13	13	13

SPEC	ML	T8	C8
STEERER	28.6-25.4		
CROWN	Aluminum ,Satin Black		
CROWN PITCH	120mm		
STANCHION	25.4 steel CP		
OUTER LEG	Aluminum		
SPRING SYSTEM	Coil / MCU		Coil spring
FEATURES	Mechanical **Lock-Out**		
WHEEL SIZE	26”/ 24”		
ADJUSTMENT	L,P	P	
TRAVEL	26”/24” : 80/50mm		
WEIGHT(W/O STEERER)	1.70kg	1.90/1.80kg	1.86/1.76kg

*** Lower: Disc only / Disc & V-brake**

*** ASR drop out for Montague CLIX system (26” only)**

L : Lock-out, P : Pre-load

KIDS

CAPA-20

CAPA 20

Capa-20-T8

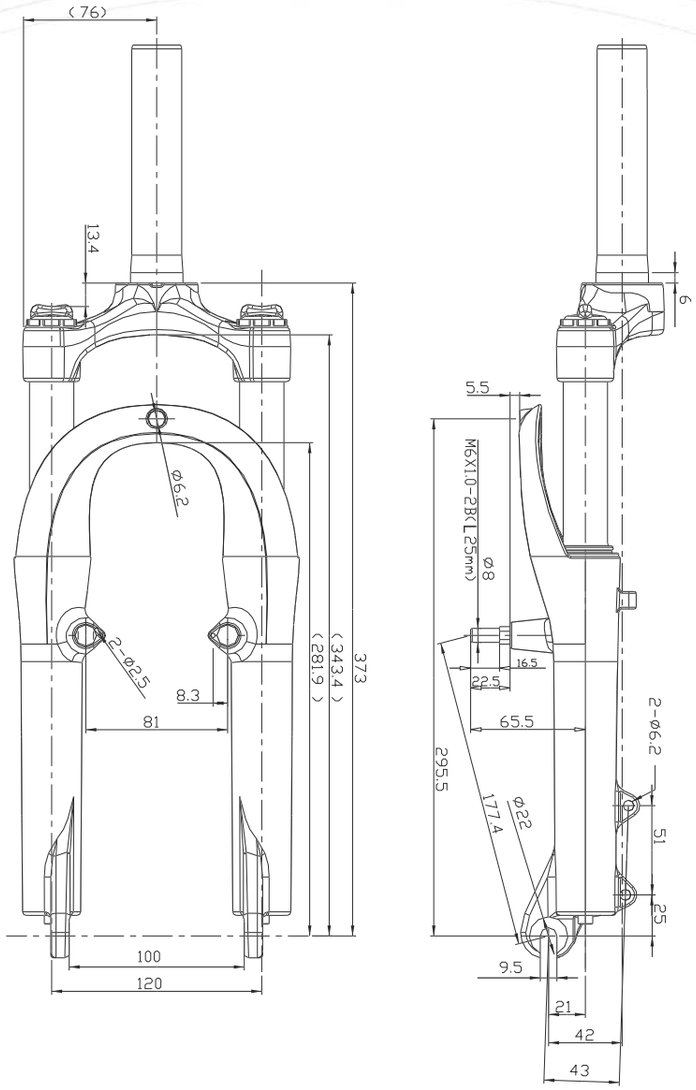

SPEC	T8	C8
STEERER	28.6/25.4	
CROWN	Aluminum ,Satin Black	
CROWN PITCH	120mm	
STANCHION	25.4 steel, CP	
OUTER LEG	Aluminum	
SPRING SYSTEM	Coil spring	
WHEEL SIZE	20”	
ADJUSTMENT	P	
TRAVEL	2”:50mm	
WEIGHT(W/O STEERER)	1.65kg	

*** Lower: Disc & V-brake**

P : Pre-load

ALU

20"

SPRING

Cross TRB&CTB

Trekking (TRB) : Riding along gravel roads for expedition and leisure exercise purpose. Trekking bike front fork needs compatible design with hub dynamo,roller brake and fender…
In addition, it also needs light weight specification and also need minimum 50mm travel if encounter some bumps while pedaling.

City bike (CTB) : For urban commuting and fitness purpose. The city bike front-fork needs light weight, elegant-looking and also some travel to provide comfortable riding.

CROSS VOGUE SERIES

Vogue

2007		2008	Remark
VOGUE AIR RL	VS.	VOGUE AIR RL	OCR & A2 SYSTEM EQUIPPED
VOGUR AIR		VOGUE AIR	OCR & A2 SYSTEM EQUIPPED
–		VOGUE PRO RL	OCR SYSTEM EQUIPPED
–		VOGUE PRO	OCR SYSTEM EQUIPPED

VOGUE - AIR

Window

CG-2

Option Cable Guide for Hub Dynamo

RL

Remote Lock-out

OCR

Hydraulic Lock-out

Turn & Lock

A²

Air Square

P

Preload

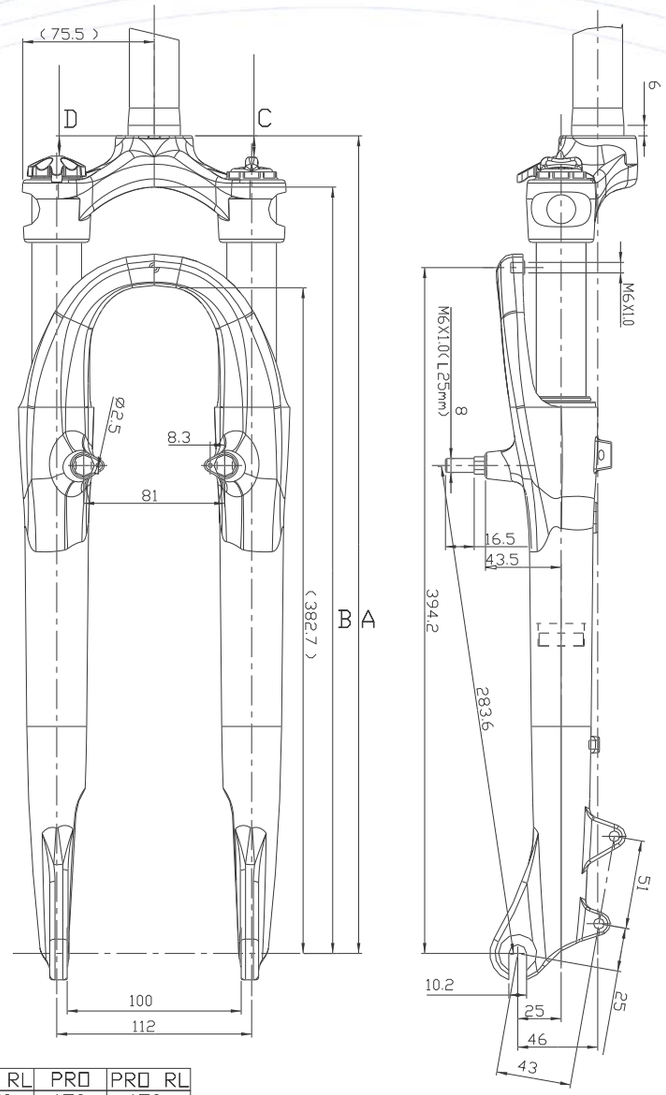

	AIR	AIR RL	PRO	PRO RL
A	470	470	470	470
B	440.5	440.5	440.5	440.5
C	11.6	11.6	12.3	12.3
D	11.7	6.9	11.7	6.9

SPEC	Air-RL	Air	Pro-RL	Pro
STEERER	28.6mm Aluminum 7050		28.6mm Cr-mo	
CROWN	Aluminum ,Shiny black			
CROWN PITCH	112mm			
STANCHION	28.6mm Aluminum 7050			
	Hard Anodize			
OUTER LEG	Magnesium			
SPRING SYSTEM	Oil(R) , Air(L)		Oil(R) , Coil / MCU(L)	
FEATURES	**Remote** Hydraulic	Hydraulic	**Remote** Hydraulic	Hydraulic
	Lock-out with **Air**		**Lock-out**	
ADJUSTMENT	A, RL, C	A, L, C	RL, P, C	L, P, C
TRAVEL	60mm			
WEIGHT(W/O STEERER)	1.41kg	1.35kg	1.56kg	1.50kg

*** Lower: Disc only / Disc & V-brake**

A :Air, RL : Remote Lock-out, L : Lock-out, P : Pre-load, C : Compression

MAG

700c

AIR

Remote LOCK OUT

MCU+S.

P

LOCK OUT

CROSS VITA SERIES

2007		2008	Remark
VOGUE RL	VS.	VITA RL	NEW NAME
VOGUE TNL		VITA TNL	NEW NAME, NEW ALLOY TNL LEVER
VOGUE SL		–	DISCONTINUE
VOGUE T7		VITA T8	NEW NAME

VITA - T8

RL

Remote Lock-out

TnL

Hydraulic Lock-out

Turn & Lock

CG-2

Option Cable Guide for Hub Dynamo

P

Preload

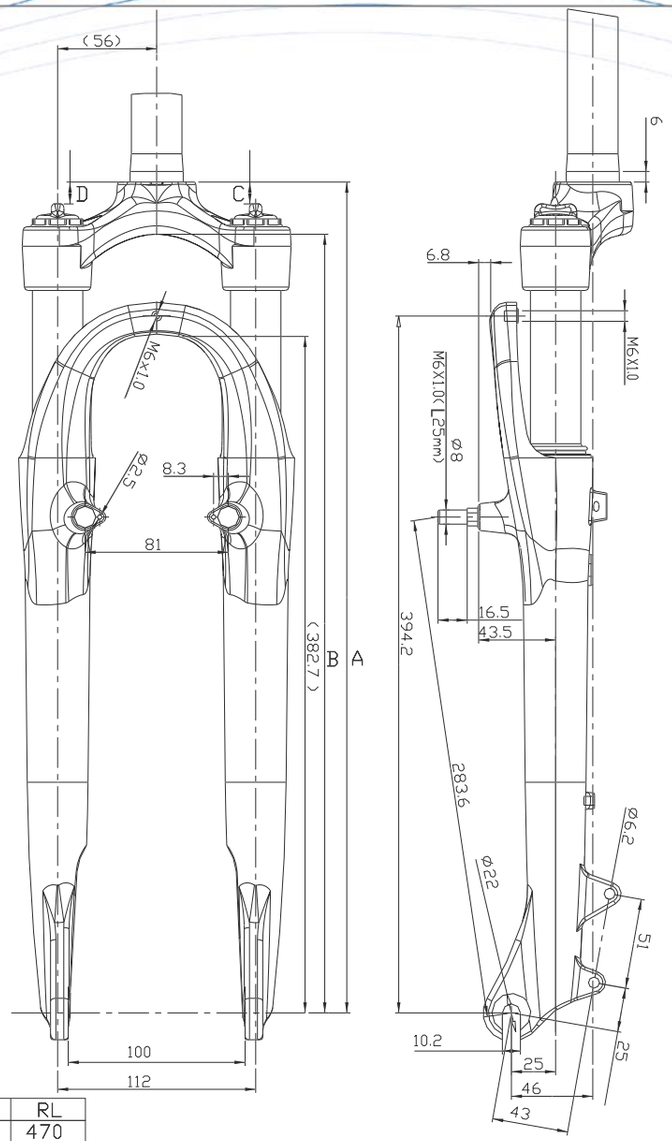

	T8	TNL	RL
A	470	470	470
B	440.5	440.5	440.5
C	12.4	12.4	12.4
D	12.4	12.4	12.4

SPEC	RL	TnL	T8
STEERER	28.6/25.4		
CROWN	Aluminum ,Shiny Black		
CROWN PITCH	112mm		
STANCHION	28.6 steel, Ti-color		
OUTER LEG	Magnesium		
SPRING SYSTEM	Oil(R),Coil/MCU(L)		Coil/MCU
FEATURES	**Remote** Hydraulic	Hydraulic	
	Lock-out	**Lock-out**	
ADJUSTMENT	RL, C, P	L, C, P	P
TRAVEL	60mm		
WEIGHT(W/O STEERER)	1.83kg	1.78kg	1.75kg

*** Lower: Disc only / Disc & V-brake**

RL : Remote Lock-out , L : Lock-out , P : Pre-load, C : Compression

NEON SERIES

CROSS

Neon

2007		2008	Remark
NEON RL		NEON RL	NEW NAME
NEON TNL		NEON TNL	NEW TNL ALLOY LEVER
NEON SL	VS.	–	DISCONTINUE
NEON ML		NEON ML	NO CHANGE
NEON T7		NEON T8	NO CHANGE
NEON C7		–	DISCONTINUE

NEON - T8

CG-1

Option Cable Guide for Hub Dynamo

RL

Remote Lock-out

TnL

Hydraulic Lock-out

Turn & Lock

ML

Mechanical Lock-out

P

Preload

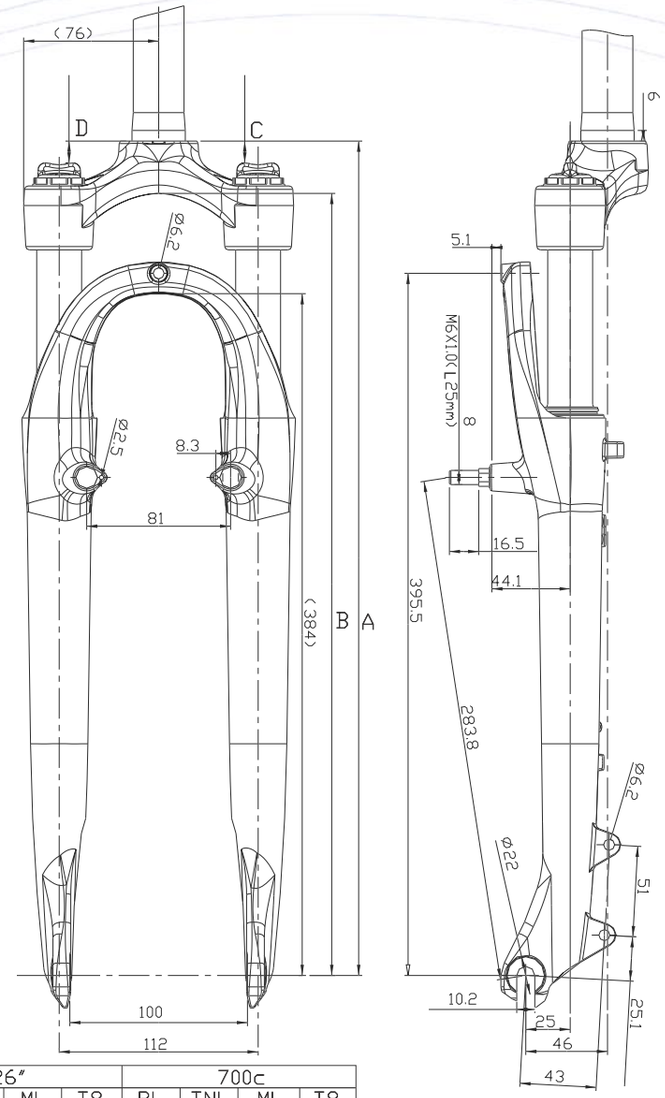

	26″				700c			
	RL	TNL	ML	T8	RL	TNL	ML	T8
A	465	465	465	465	470	470	470	470
B	439.3	439.3	439.3	439.3	440.5	440.5	440.5	440.5
C	11.8	11.8	11.8	11.8	12.3	12.3	12.3	12.3
D	7.7	11.5	8.4	11.8	8.1	11.6	8.7	12.3

SPEC	RL-7/6	TnL-7/6	ML-7/6	T8-7/6
STEERER	28.6/25.4			
CROWN	Aluminum ,Shiny Black			
CROWN PITCH	112mm			
STANCHION	25.4 steel Ti-color			
OUTER LEG	Aluminum			
SPRING SYSTEM	Oil(R),Coil spring/MCU(L)		Coil/MCU	
FEATURES	Remote Hydraulic Lock-out	Hydraulic Lock-out	Mechanical Lock-out	
ADJUSTMENT	RL, C, P	L, C, P	L, P	P
TRAVEL	700C: 60mm / 26”: 75mm			
WEIGHT(W/O STEERER)	2.01/1.96kg	1.96/1.91kg	1.73/1.68kg	1.93/1.88kg

*** Lower: Disc only / Disc & V-brake**

*** ASR drop out for Montague CLIX system (700C only)**

RL : Remote Lock-out , L : Lock-out , P : Pre-load

ALU

700c

MCU+S.

P

Remote LOCK OUT

TnL Turn & Lock

TR-PRO SERIES

2007		2008	Remark
TR PRO 1 RL	VS.	TR PRO RL	SHINY BLK CROWN
TR PRO 1 TNL		TR PRO TNL	SHINY BLK CROWN, NEW ALLOY TNL LEVER
TR PRO 1 SL		–	DISCONTINUE
TR PRO 1 T7		TR PRO T8	SHINY BLK CROWN

TR-PRO-T8

RL

Remote Lock-out

TnL

Hydraulic Lock-out

Turn & Lock

CG-1

Option Cable Guide for Hub Dynamo

P

Preload

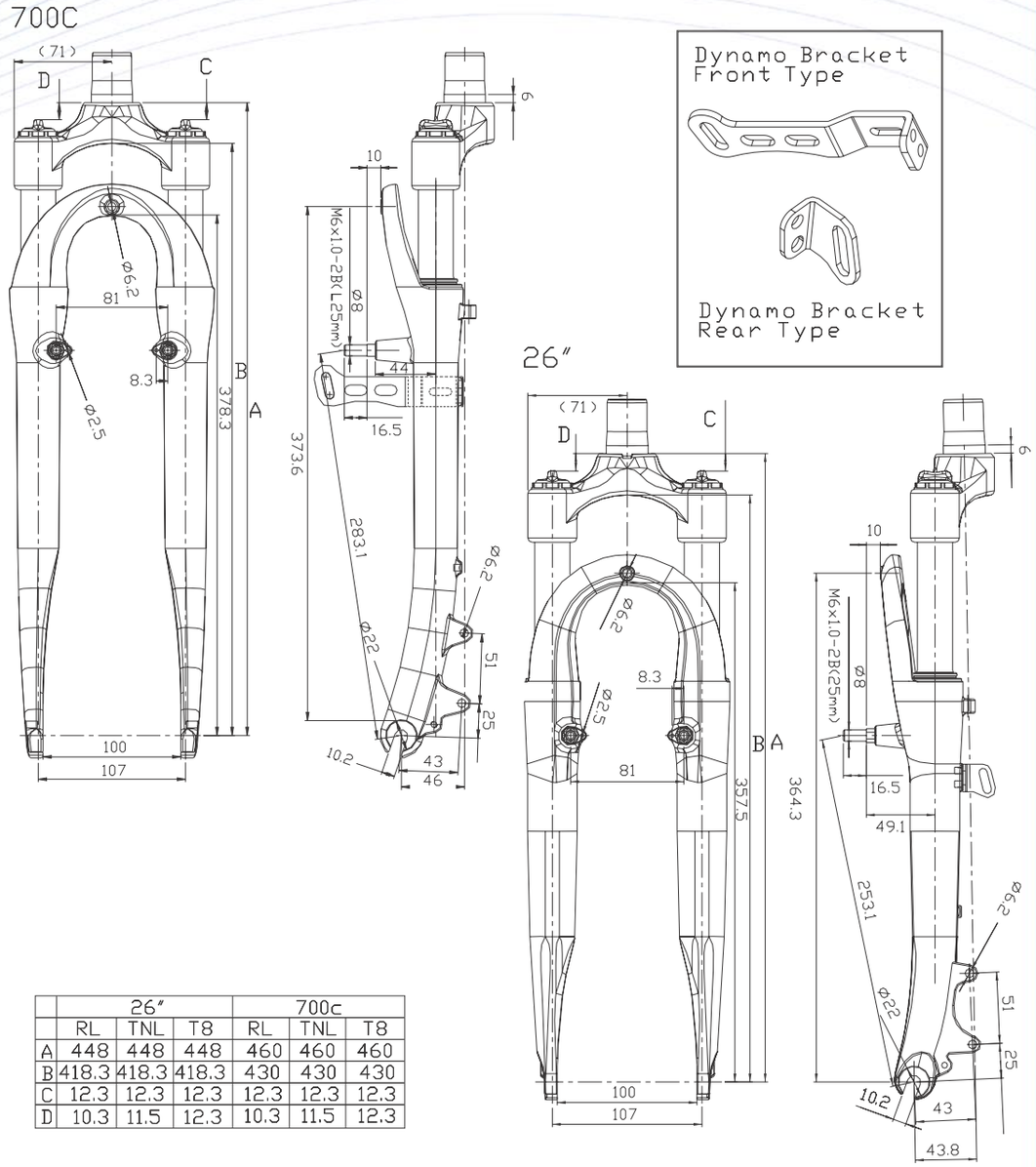

	26"			700c		
	RL	TNL	T8	RL	TNL	T8
A	448	448	448	460	460	460
B	418.3	418.3	418.3	430	430	430
C	12.3	12.3	12.3	12.3	12.3	12.3
D	10.3	11.5	12.3	10.3	11.5	12.3

SPEC	RL-7/6	TnL-7/6	T8-7/6
STEERER		28.6/25.4	
CROWN		Aluminum ,Shiny Black	
CROWN PITCH		107mm	
STANCHION		25.4 steel	
OUTER LEG		Magnesium	
SPRING SYSTEM	Oil(R),Coil/MCU(L)		Coil/MCU
FEATURES	**Remote** Hydraulic	Hydraulic	
	Lock-out	**Lock-out**	
ADJUSTMENT	RL, C, P	L, C, P	P
TRAVEL		2"(50mm)	
WEIGHT(W/O STEERER)	1.58kg	1.53kg	1.50kg

*** Lower: Disc only / Disc & V-brake**

RL : Remote Lock-out, L : Lock-out, P : Pre-load, C : Compression

TRB SOFI SERIES

2007	VS.	2008	Remark
–		SOFI RL	NEW MODEL, V-BRAKE COMPATIBLE ONLY
–		SOFI TNL	NEW MODEL, V-BRAKE COMPATIBLE ONLY
–		SOFI ML	NEW MODEL, V-BRAKE COMPATIBLE ONLY
–		SOFI T8	NEW MODEL, V-BRAKE COMPATIBLE ONLY

SOFI - T8(700C)

CG-1 For 26" CG-2 For 700C

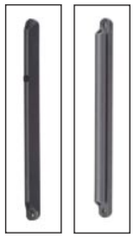

Option Cable Guide for Hub Dynamo

RL

Remote Lock-out

TnL

Hydraulic Lock-out

Turn & Lock

ML

Mechanical Lock-out

P

Preload

700C

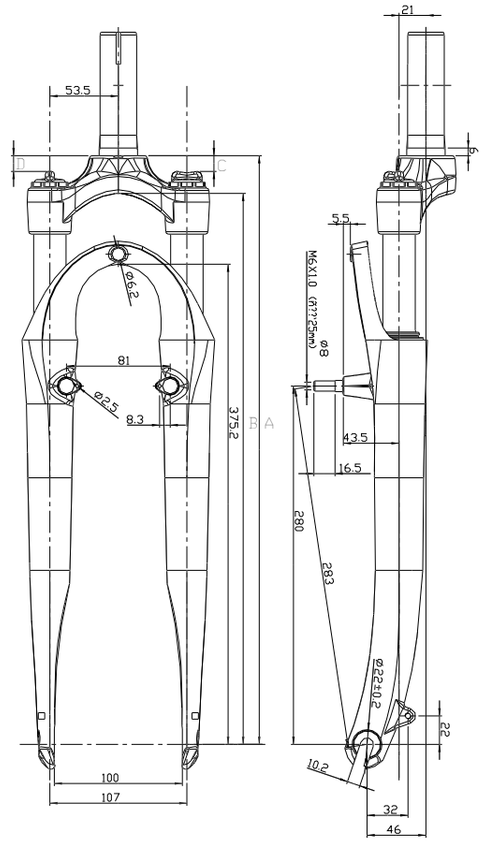

26"

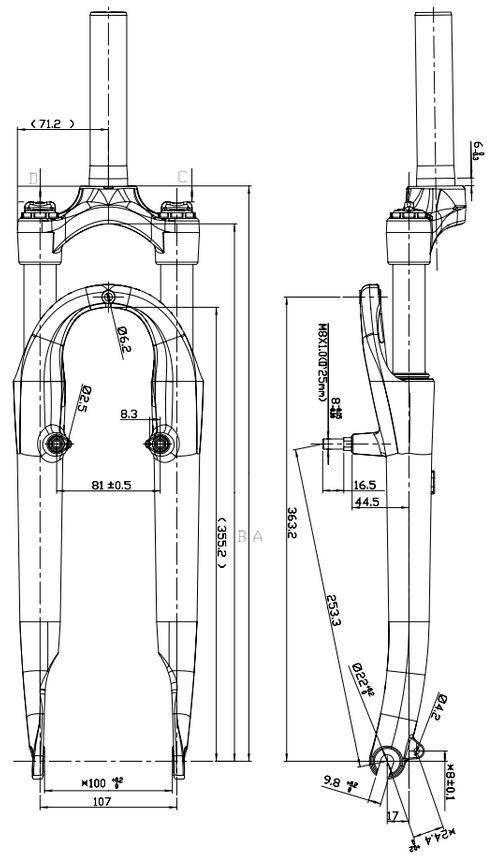

	26"				700c			
	RL	TNL	ML	T8	RL	TNL	ML	T8
A	450	450	450	450	460	460	460	460
B	420.5	420.5	420.5	420.5	430.5	430.5	430.5	430.5
C	12.3	12.3	12.3	12.3	12.3	12.3	12.3	12.3
D	8.1	11.6	8.6	12.3	8.1	11.6	8.6	12.3

SPEC	RL-7/6	TnL-7/6	ML-7/6	T8-7/6
STEERER	28.6/25.4			
CROWN	Aluminum, Shiny Black			
CROWN PITCH	107mm			
STANCHION	25.4 steel, CP			
OUTER LEG	Aluminum			
SPRING SYSTEM	Oil(R),Coil/MCU(L)		Coil/MCU	
FEATURES	Remote Hydraulic Lock-out	Hydraulic Lock-out	Mechanical Lock-out	
ADJUSTMENT	RL, C, P	L, C, P	L, P	P
TRAVEL	2"(50mm)			
WEIGHT(W/O STEERER)	1.81kg	1.76kg	1.53kg	1.73/1.68kg

*** Lower: V-brake only**

*** ASR drop out for Montague CLIX system (700C only)**

RL : Remote Lock-out, L : Lock-out,P : Pre-load, C : Compression

TRENDY SERIES

Trendy

2007		2008	Remark
TRENDY RL		TRENDY RL	SHINY BLK CROWN
TRENDY TNL		TRENDY TNL	SHINY BLK CROWN
TRENDY SL	vs.	–	DISCONTINUE
TRENDY ML		TRENDY ML	SHINY BLK CROWN
TRENDY T7		TRENDY T8	SHINY BLK CROWN
TRENDY C7		–	DISCONTINUE

TRENDY-T8

Tunnel Cable guide
For Hub Dynamo

RL

Remote Lock-out

TnL

Hydraulic Lock-out

Turn & Lock

ML

Mechanical Lock-out

P

Preload

SPEC	RL-7/6	TnL-7/6	ML-7/6	T8-7/6
STEERER	28.6/25.4			
CROWN	Aluminum, Shiny Black			
CROWN PITCH	107mm			
STANCHION	25.4 steel, CP			
OUTER LEG	Aluminum			
SPRING SYSTEM	Oil(R),Coil/MCU(L)		Coil/MCU	
FEATURES	**Remote** Hydraulic **Lock-out**	Hydraulic **Lock-out**	Mechanical **Lock-out**	
ADJUSTMENT	RL, C, P	L, C, P	L, P	P
TRAVEL	2"(50mm)			
WEIGHT(W/O STEERER)	1.91kg	1.86kg	1.63kg	1.83kg

*** Lower: V-brake only**

RL : Remote Lock-out, L : Lock-out, P : Pre-load, C : Compression

700C

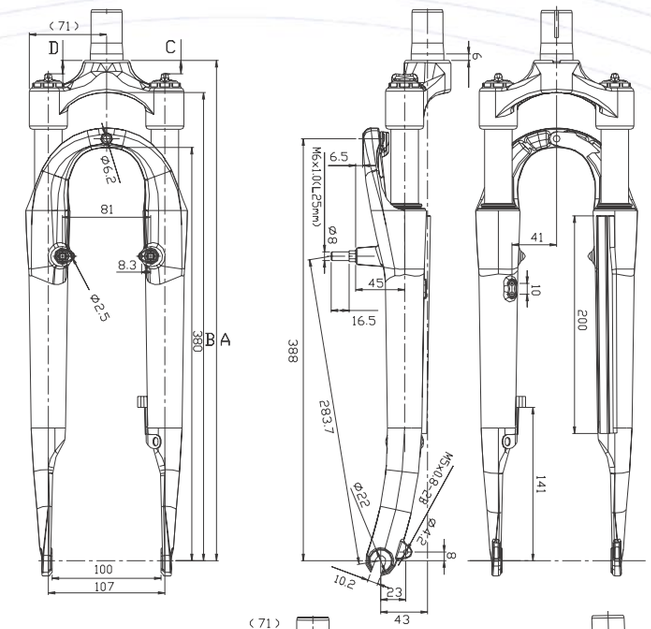

26″

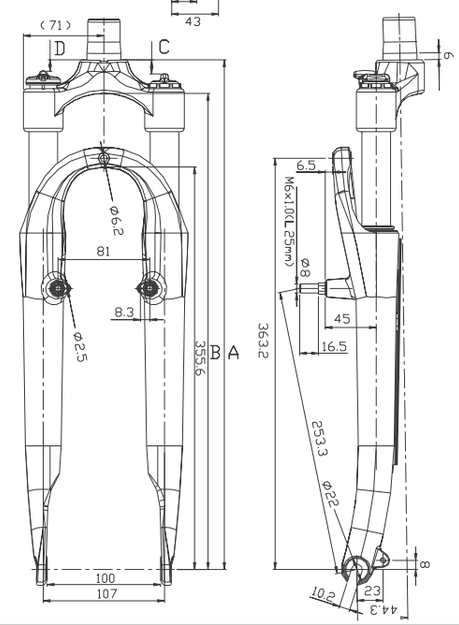

	26″				700c			
	RL	TNL	ML	T8	RL	TNL	ML	T8
A	450	450	450	450	460	460	460	460
B	420.5	420.5	420.5	420.5	430.5	430.5	430.5	430.5
C	12.3	12.3	12.3	12.3	12.3	12.3	12.3	12.3
D	10.3	13.3	10.3	10.3	10.3	13.3	10.3	12.3

ALU
700c
26"
MCU+S.
P
Remote LOCK OUT
TnL Turn & Lock

ROAD FITNESS

CORSA SERIES

2007	vs.	2008	Remark
CORSA SL		CORSA	NO CHANGE
CORSA ST		–	DISCONTINUE

CORSA- SL

SL

Hydraulic Lock-out

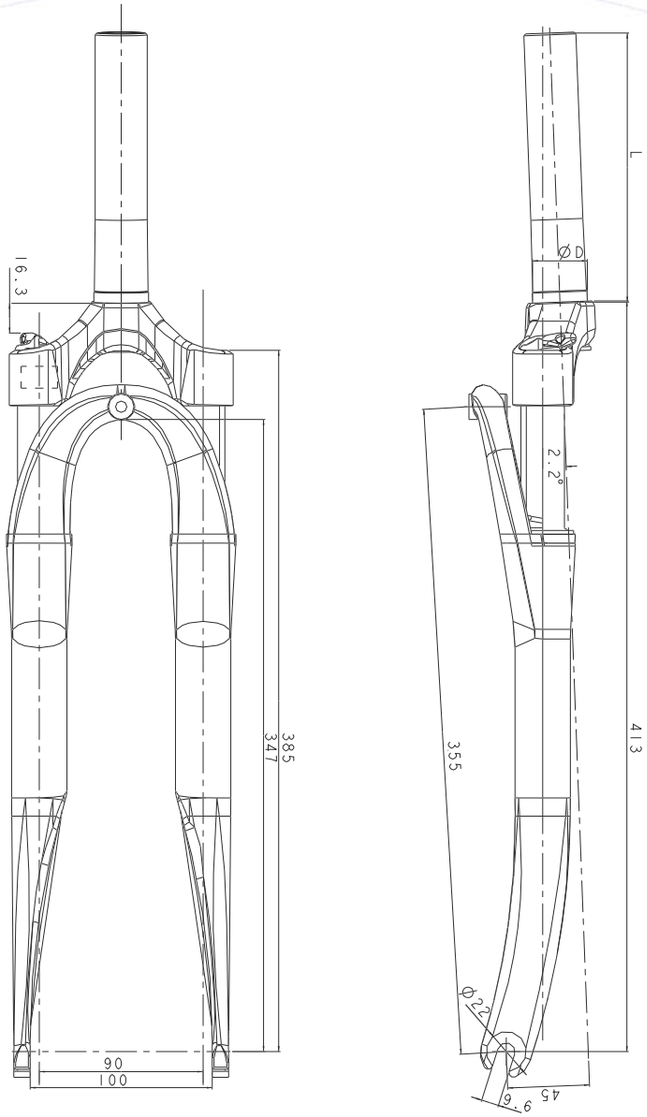

SPEC	
STEERER	28.6/25.4
CROWN	Cold-forged Aluminum Polished
CROWN PITCH	90mm
STANCHION	24mm Aluminum 7050 Hard Anodizel
OUTER LEG	Magnesium
SPRING SYSTEM	Oil (R)/Coil(L)
FEATURES	Hydraulic **Lock out**
ADJUSTMENT	L
TRAVEL	40mm
WEIGHT(W/O STEERER)	1.03kg

L : Lock-out , P : Pre-load

MAG
ROAD
MCU+S.
P+
LOCK OUT

191 / 777 / 190

MTB 191 SERIES

2007		2008	Remark
191 T7	vs.	191 T8	80 MM TRAVEL FOR 26"
191 C7		191 C8	80 MM TRAVEL FOR 26"

191-T8

P

Preload

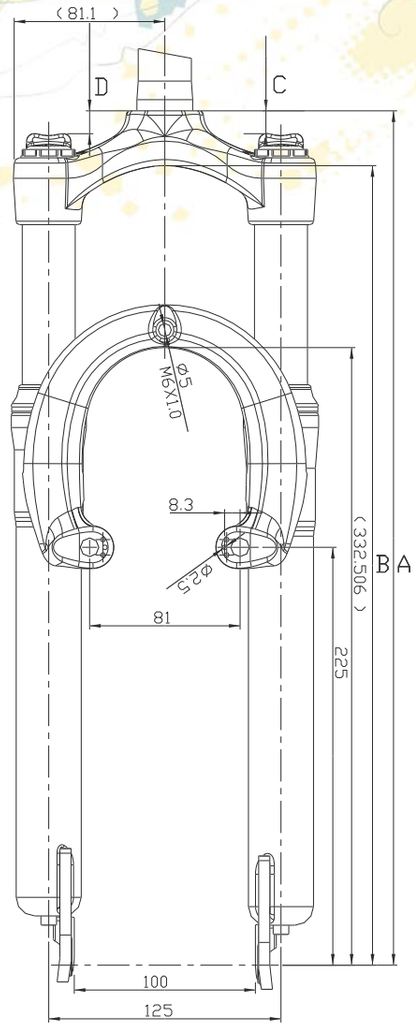

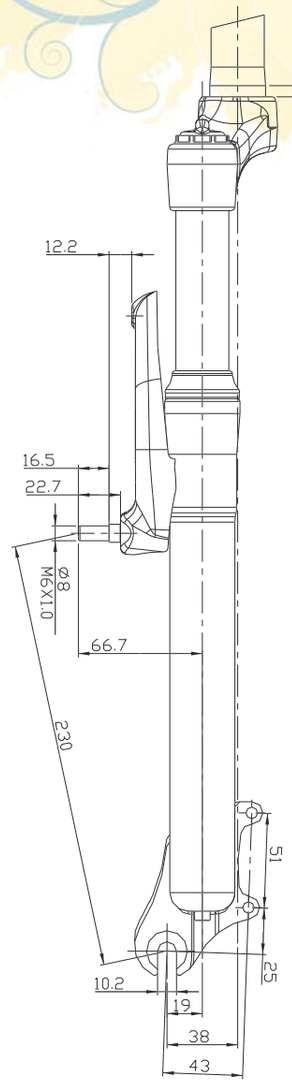

	T8			C8		
	26"	24"	20"	27"	26"	24"
A	230	226.1	172.7	230	226.1	172.7
B	460	398	337	460	398	337
C	430.5	368.5	303.5	430.5	368.5	303.5
E	332.5	328.5	273.5	332.5	328.5	273.5
F	16.8	16.8	16.8	12.3	12.3	12.3

SPEC	T8	C8
STEERER	28.6/25.4	
CROWN	Aluminum ,Satin Black	
CROWN PITCH	125mm	
STANCHION	28.6 steel, CP	
OUTER LEG	Steel	
SPRING SYSTEM	Coil/MCU	Coil spring
ADJUSTMENT	P	
TRAVEL	26"/24"/20":80/50/35mm	
WEIGHT(W/O STEERER)	2.1kg	

*** ASR drop out for Montague CLIX system (700C only)**

P : Pre-load

26" 24" 20" P SPRING

OMNI CROSS 777 SERIES

2007		2008	Remark
777 T7	vs.	777 T8	NO CHANGE
777 C7		777 C8	NO CHANGE

777-T8

P

Preload

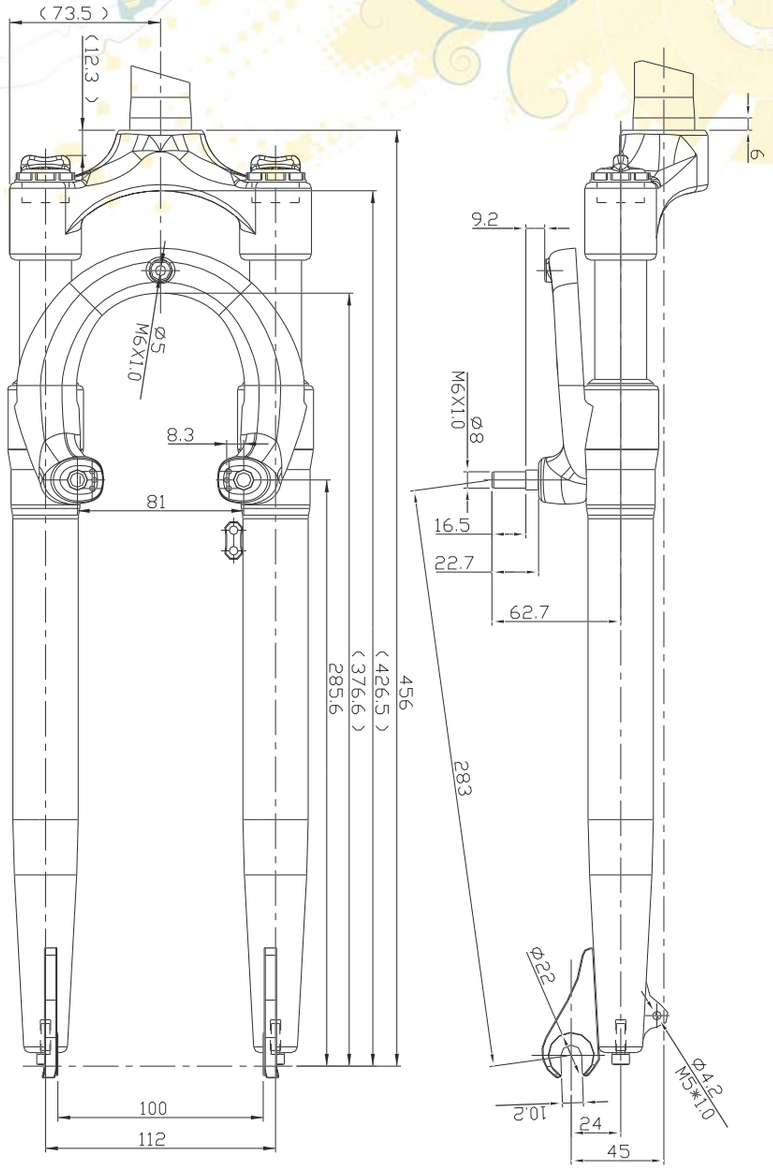

SPEC	T8	C8
STEERER	28.6/25.4	
CROWN	Aluminum ,Shiny Black	
CROWN PITCH	112mm	
STANCHION	25.4 steel, CP	
OUTER LEG	P Steel	
SPRING SYSTEM	Coil/MCU	Coil spring
ADJUSTMENT		
TRAVEL	50mm	
WEIGHT(W/O STEERER)	2.05kg	

*** ASR drop out for Montague CLIX system (700C only)**

P : Pre-load

700c

SPRING

CTB 790 SERIES

2007	vs.	2008	Remark
790 T7		790 T8	NO CHANGE
790 C7		790 C8	NO CHANGE

790-T8

P

Preload

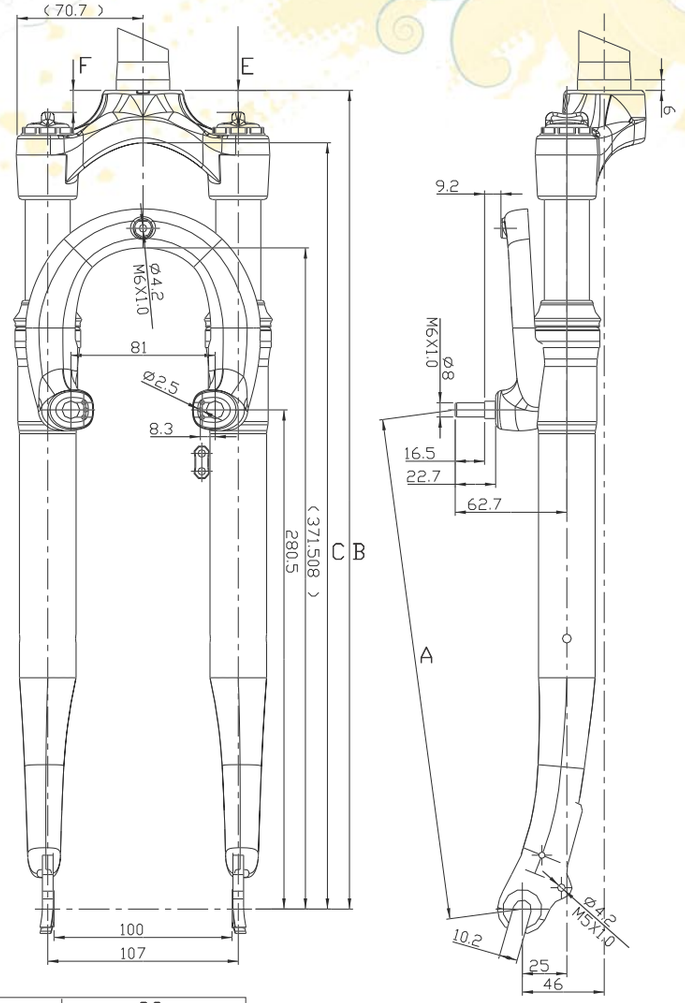

SPEC	T8-7/6/4	C8-7/6/4
STEERER	28.6/25.4	
CROWN	Aluminum ,Shiny Black	
CROWN PITCH	107mm	
STANCHION	25.4mm CP steel	
OUTER LEG	Steel	
SPRING SYSTEM	Coil spring/MCU	Coil spring
ADJUSTMENT	P	
TRAVEL	50/ 50/ 40mm	
WEIGHT(W/O STEERER)	1.7kg	

P : Pre-load

	T8			C8		
	27″	26″	24″	27″	26″	24″
A	283	253.1	226	283	253.1	226
B	460	438	407	460	435	407
C	430	408.6	378.1	430.5	408.6	378.1
E	371.5	356.7	329.2	371.5	356.7	329.2
F	16.8	16.8	16.8	12.3	12.3	12.3

700c

26"

24"

SPRING

08' RST

ACCESSARY & OEM INFORMATION

ACCESSARY

CG-1

Cable guide for hub dynamo

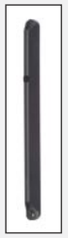

Option available for : VOGUE, VITA, TR PRO, NEON 26", SOFI 26"

CG-2

Cable guide for hub dynamo

Option available for : NEON 700C, SOFI 700C

Front lamp bracket

Compatible for front lamp

B+M BUSCH + MÜLLER

Option available for : VOGUE, VITA, TR PRO, NEON, SOFI

TA

20mm Aluminum Through Axle

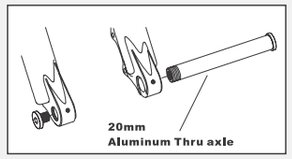

Featured in : SIGMA, R1, STORM, SPACE

QR

Adaptor for Quick Release

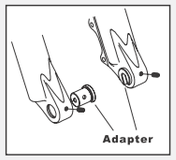

Featured in : STORM, SPACE

STEERER WEIGHT

Steerer Tube		Length	Weight
Aluminum 7050	28.6mm	265mm	166.5g
Hi-ten	28.6mm	250mm	304g
Hi-ten	25.4mm	260mm	283g

OEM INFORMATION

1. Steerer dimension :

A. Length : Max. 260mm / Min. 160mm (If threaded)

B. Diameter : 28.6mm, corresponding cone race 30mm
25.4mm, corresponding cone race 26.4 or 27mm

C. Threads : (Steerer length + 32mm – threads length) must ≥ 110mm

2. Certain rules for order placing :

A. Always put only one option code after model name. For instance, the Omega series with RL option. Please just mention "Omega RL", no need to emphasize Omega+T8+TNL+RL.
(Remark :The definition of option code, please refer to page 1)

B. Below models provide different kinds of travel for spec.. Need travel indication.
STORM, SPACE, TITAN, FIRST, M-29, OMEGA, LAUNCH, GILA PRO, GILA
(Remark : For the travel details, please refer to the product specification)

C. All of TRB and CTB forks are able to fix two type of dynamo bracket "Front type" & "Rear type". Please find the drawing details in page 46.

D. STORM and SPACE series have TA or QR option for different axle fixing.
TA means for "through axle", which will provide 20mm axle as complement.
QR means for "Quick release", which will provide particular adaptor for quick release fixing.

3. Below models which equipped with OCR open-bath hydraulic system for lock-out feature. TITAN, FIRST, M-29, VOGUE
Above open-bath hydraulic forks may get temporary out of function appearance after transportation. Please just place the fork in straight position and compress it couple times. Then, the non-function problem would be solved.

4. Below models have two set outer leg casting available - with pivot boss or without pivot boss. Please indicate which type you wish to have. TITAN, FIRST, OMEGA, LAUNCH, GILA PRO, GILA, VOGUE, VITA

5. The correct position to assemble remote lock-out adjuster on right / left hand position as below pictures.

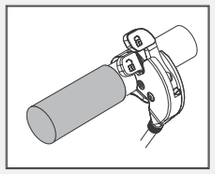

Left hand

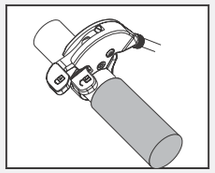

Right hand

08' RST

DIMENSIONS & TOOLS

DIMENSIONS OF REMOTE LOCK-OUT

RL : Hydraulic "Remote Lock-out" system

CABLE LENGTH : 450 mm

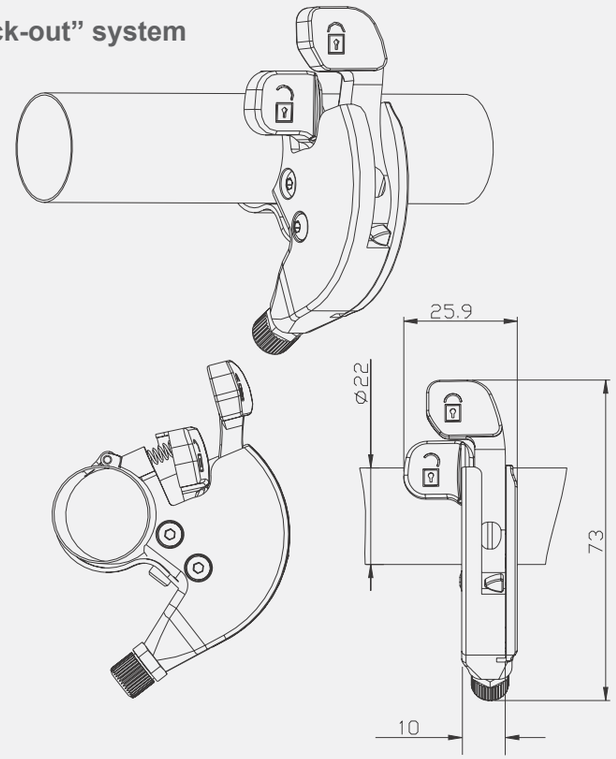

TOOLS

BAGPIPE for RST Air-System

 # PFGP - 2200 - 200

RST Special wrench for disassemble Pre-load adjuster. (two sizes)

 # M5GAC615

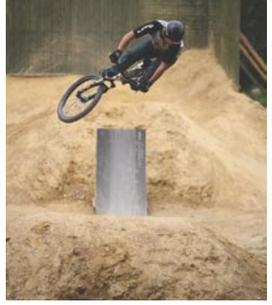

DIMENSION FOR TIRE & ROTOR ASSEMBLY

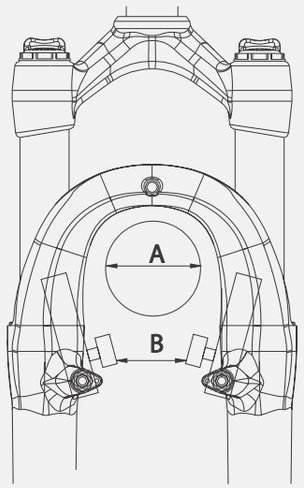

unit : mm

MODEL NAME	WIDTH A	WIDTH B	MAXIMUM RECOMMENDED ROTOR SIZE
SIGMA	<75		203
R 1 /STORM	<69		203
SPACE	<69		180
TITAN	<67	65	160
FIRST/OMEGA	<66	64	160
LAUNCH	<66		160
GILA-PRO	<64	62	160
GILA	<64	62	160
CAPA		54	160
CAPA-20		54	
VOGUE		57	160
VITA		54	160
NEON		55	160
TR-PRO		52	160
SOFI		50	
TRENDY		52	
CORSA	<36		
191		64	160
777		63	
790		54	

*Above measurements are just for reference only. Please check the real dimension of front wheel and brake pads for appropriate setting

RST 2008 PRODUCTS SPECIFICATION

Name	SIGMA	R1	STORM		SPACE		TITAN				FIRST			
Model			Super 1.5" TA or QR	Super TA or QR	Jump TA or QR	Free TA or QR	Air-RL	Air	Pro-RL	Pro	Air-RL	Air	Pro-RL	Pro
Steerer	28.6mm 7050 Aluminum	28.6mm 7050 Aluminum	1.5" 7050 Aluminum	28.6mm Cr-mo steel	28.6mm 7050 Aluminum	28.6mm Cr-mo steel	28.6mm 7050 Aluminum	28.6mm 7050 Aluminum	28.6mm Cr-mo steel	28.6mm Cr-mo steel	28.6mm 7050 Aluminum	28.6mm 7050 Aluminum	28.6 Cr-Mo	28.6 Cr-Mo
Crown	148mm-Dual Aluminum, Satin Black	138mm-Dual Aluminum, Satin Black	138mm Aluminum, Satin Black	138mm Aluminum, Satin Black	138mm Aluminum, Satin Black	138mm Aluminum, Satin Black	130mm Aluminum, Satin Black	130mm Aluminum, Satin Black	130mm Aluminum, Satin Black	130mm Aluminum, Satin Black	125mm Aluminum, Satin Black	125mm Aluminum, Satin Black	125mm Aluminum, Satin Black	125mm Aluminum, Satin Black
Stanchion	36mm 7050 Aluminum Hard Anodize	36mm 7050 Aluminum Hard Anodize	36mm Cr-mo steel Ti color	36mm Cr-mo steel Ti color	36mm 7050 Aluminum Hard Anodize	36mm Cr-mo steel Ti color	32mm 7050 Aluminum Hard Anodize	32mm 7050 Aluminum Hard Anodize	32mm 7050 Aluminum Hard Anodize	32mm 7050 Aluminum Hard Anodize	30mm 7050 Aluminum Hard Anodize	30mm 7050 Aluminum Hard Anodize	30mm 7050 Aluminum Hard Anodize	30mm 7050 Aluminum Hard Anodize
Casting	CNC machined Aluminum	Magnesium	Magnesium	Magnesium	Magnesium	Magnesium	Magnesium	Magnesium	Magnesium	Magnesium	Magnesium	Magnesium	Magnesium	Magnesium
Feature	Hydraulic Adjust-Rebound with Air	Hydraulic Adjust-Rebound	Hydraulic Adjust-Rebound	Hydraulic Adjust-Rebound	Hydraulic Adjust-Rebound with Air	Hydraulic Adjust-Rebound	Adjust-Rebound with Air, Remote Lock-out	Hydraulic Adjust-Rebound with Air, Lock-out	Hydraulic Adjust-Rebound , Remote Lock-out	Hydraulic Adjust-Rebound , Lock-out	Hydraulic Adjust-Rebound with Air, Remote Lock-out	Hydraulic Adjust-Rebound with Air, Lock-out	Hydraulic Adjust-Rebound , Remote Lock-out	Hydraulic Adjust-Rebound , Lock-out
Spring	Oil/Air (R), Air/Coil (L)	Oil (R), Coil/MCU (L)	Oil (R), Coil/MCU (L)	Oil (R), Coil/MCU (L)	Oil (R), Air (L)	Oil (R), Coil/MCU (L)	Oil (R), Air (L)	Oil (R), Air (L)	Oil (R), Coil/MCU (L)	Oil (R), Coil/MCU (L)	Oil (R), Air (L)	Oil (R), Air (L)	Oil (R), Coil/MCU (L)	Oil (R), Coil/MCU (L)
Adjustment	A, R, P	R	R	R	A, R	R	A, R, RL, C	A, R, L, C	R, RL, C, P	R, L, C, P	A, R, RL, C	A, R, L, C	R, RL, C, P	R, L, C, P
Travel (mm)	8" (203mm)	180 mm	140, 160, 180 mm	140, 160, 180 mm	80, 100 mm	80, 100 mm	100, 130 mm	100, 130 mm	100, 130 mm	100, 130 mm	80, 100 mm	80, 100 mm	80, 100 mm	80, 100 mm
Fork height (mm)	589	555	520 / 540 / 560	520 / 540 / 560	465 / 485		480 / 510				460 / 480			
Boot	n/a	n/a	n/a	n/a	n/a	n/a	n/a	n/a	n/a	n/a	n/a	n/a	n/a	n/a
Disc Brake Mount	yes		Post mount		yes	yes	yes	yes	yes	yes	yes	yes	yes	yes
Dynamo Bracket Mount	–	–	–	–	–	–	–	–	–	–	–	–	–	–
Cable Guide for Hub Dynamo	–	–	–	–	–	–	–	–	–	–	–	–	–	–
Remote Lockout option	–	–	–	–	–	–	–	yes	–	yes	–	yes	–	yes
Roller Brake Mount	–	–	–	–	–	–	–	–	–	–	–	–	–	–
Weight (kgs) (w/o steerer)	3.60	2.60	2.74	2.70	2.28	2.60	1.75	1.69	1.90	1.84	1.58	1.52	1.73	1.67
Wheel size	26" (20mm Aluminum thru axle)		26" TA(20mm Aluminum thru axle) Quick Release)		QR (Adapter for		26"	26"	26"	26"	26"	26"	26"	26"
Availability	April 07	May 07	May 07	May 07	May 07	May 07	May 07	May 07	May 07	May 07	April 07	April 07	April 07	April 07
Origin of Production	Taiwan	Taiwan	Taiwan	Taiwan	Taiwan	Taiwan	Taiwan	Taiwan	Taiwan	Taiwan	Taiwan	Taiwan	Taiwan	Taiwan
2008 VS 2007	SIGMA	New	New	New	New Crown Space Jump	New Crown Space Free	Rapide Air-RL	Rapide Air	New	New	New Crown Megaan Air-RL	New Crown Megaan Air	New	New
Brake Pivot Boss	Disc brake only		Disc brake only		Disc brake only		no pivot boss lower available				no pivot boss lower available			
Remarks	–	–	–		–		MONTAGUE CLIX compatible (MSR)				MONTAGUE CLIX compatible (MSR)			
Bike Category	Down hill		Free ride		Dirt Jump		All Mountain				XC			

RST 2008 PRODUCTS SPECIFICATION

Name	M-29				VOGUE				CORSA	OMEGA			
Model	Air-RL	Air	Pro-RL	Pro	Air-RL	Air	Pro-RL	Pro		RL	TnL	RA	T8
Steerer	28.6mm 7050 Aluminum	28.6mm 7050 Aluminum	28.6 Cr-Mo	28.6 Cr-Mo	28.6mm 7050 Aluminum	28.6mm 7050 Aluminum	28.6 Cr-Mo	28.6 Cr-Mo	28.6/25.4	28.6/25.4	28.6/25.4	28.6/25.4	28.6/25.4
Crown	130mm Aluminum, Satin Black	130mm Aluminum, Satin Black	130mm Aluminum, Satin Black	130mm Aluminum, Satin Black	112mm Aluminum, Shiny Black	112mm Aluminum, Shiny Black	112mm Aluminum, Shiny Black	112mm Aluminum, Shiny Black	90mm Aluminum, Polished	125mm Aluminum, Satin Black	125mm Aluminum, Satin Black	125mm Aluminum, Satin Black	125mm Aluminum, Satin Black
Stanchion	32mm 7050 Aluminum Hard Anodize	32mm 7050 Aluminum Hard Anodize	32mm 7050 Aluminum Hard Anodize	32mm 7050 Aluminum Hard Anodize	28.6 mm 7050 Aluminum Hard Anodize	28.6 mm 7050 Aluminum Hard Anodize	28.6 mm 7050 Aluminum Hard Anodize	28.6 mm 7050 Aluminum Hard Anodize	24mm 7050 Aluminum Hard Anodize	30 steel Ti-color	30 steel Ti-color	30 steel Ti-color	30 steel Ti-color
Casting	Magnesium	Magnesium	Magnesium	Magnesium	Magnesium	Magnesium	Magnesium	Magnesium	Magnesium	Magnesium	Magnesium	Magnesium	Magnesium
Feature	Hydraulic Adjust-Rebound with Air, Remote Lock-out	Hydraulic Adjust-Rebound with Air, Lock-out	Hydraulic Adjust-Rebound , Remote Lock-out	Hydraulic Adjust-Rebound , Lock-out	Remote Hydraulic Lock-out with Air	Hydraulic Lock-out with Air	Remote Hydraulic Lock-Out	Hydraulic Lock-Out	Hydraulic Lock-out	Remote Hydraulic Lock-Out	Hydraulic Lock-Out	Hydraulic Adjust-Rebound	–
Spring	Oil (R), Air (L)	Oil (R), Air (L)	Oil (R), Coil/MCU (L)	Oil (R), Coil/MCU (L)	Oil (R), Air (L)	Oil (R), Air (L)	Oil (R), Coil/MCU (L)	Oil (R), Coil/MCU (L)	Oil (R), Coil (L)	Oil (R), Coil/MCU (L)	Oil (R), Coil/MCU (L)	Oil (R), Coil/MCU (L)	Coil/MCU
Adjustment	A, R, RL, C	A, R, L, C	R, RL, C, P	R, L, C, P	A, RL, C	A, L, C	RL, P, C	L, P, C	L	RL, C, P	L, C, P	R, P	P
Travel (mm)	80, 100 mm	80, 100 mm	80, 100 mm	80, 100 mm	60 mm	60 mm	60 mm	60 mm	40 mm	80, 100 mm	80, 100 mm	80, 100 mm	80, 100 mm
Fork height (mm)	490 / 510				470				412	460 / 480			
Boot	n/a	n/a	n/a	n/a	n/a	n/a	n/a	n/a	n/a	n/a	n/a	n/a	n/a
Disc Brake Mount	Post mount				yes	yes	yes	yes	–	yes	yes	yes	yes
Dynamo Bracket Mount	–	–	–	–	yes	yes	yes	yes	–	–	–	–	–
Cable Guide for Hub Dynamo	–	–	–	–	option	option	option	option	–	–	–	–	–
Remote Lockout option	–	yes	–	yes	–	yes	–	yes	–	–	yes	–	–
Roller Brake Mount	–	–	–	–	no	no	no	no	–	–	–	–	–
Weight (kgs) (w/o steerer)	1.82	1.76	1.97	1.91	1.41	1.35	1.56	1.50	1.03	2.00	1.94	1.94	1.91
Wheel size	29"	29"	29"	29"	700C only	700C only	700C only	700C only	700 x 28 / 32	26"	26"	26"	26"
Availability	May 07	May 07	May 07	May 07	April 07	April 07	April 07	April 07	April 07	April 07	April 07	April 07	April 07
Origin of Production	Taiwan	Taiwan	Taiwan	Taiwan	Taiwan	Taiwan	Taiwan	Taiwan	Taiwan	China	China	China	China
2008 VS 2007	New	New	New	New	–	–	New	New	Corsa-SL	–	–	–	Omega-T7
Brake Pivot Boss	Disc brake only (Post mount)				no pivot boss lower available				caliper brake only	no pivot boss lower available			
Remarks	MONTAGUE CLIX compatible (ASR)				MONTAGUE CLIX compatible (MSR)				MONTAGUE CLIX compatible (MSR)	MONTAGUE CLIX compatible (MSR)			
Bike Category	29" wheel				Cross (Straight Lower)				Fitness or Cycle cross	XC			

RST 2008 PRODUCTS SPECIFICATION

Name	LAUNCH		GILA PRO				GILA				
Model	RA	T8	RL	TnL	RA	T8	RL	TnL	RA	ML	T8
Steerer	28.6/25.4	28.6/25.4	28.6/25.4	28.6/25.4	28.6/25.4	28.6/25.4	28.6/25.4	28.6/25.4	28.6/25.4	28.6/25.4	28.6/25.4
Crown	130mm	130mm	125mm	125mm	125mm	125mm	125mm	125mm	125mm	125mm	125mm
	Aluminum, Satin Black	Aluminum, Satin Black	Aluminum, Satin Black	Aluminum, Satin Black	Aluminum, Satin Black	Aluminum, Satin Black	Aluminum, Satin Black	Aluminum, Satin Black	Aluminum, Satin Black	Aluminum, Satin Black	Aluminum, Satin Black
Stanchion	32 steel	32 steel	30 steel	30 steel	30 steel	30 steel	28.6 steel	28.6 steel	28.6 steel	28.6 steel	28.6 steel
	Ti-color	Ti-color	Ti-color	Ti-color	Ti-color	Ti-color	Ti-color	Ti-color	Ti-color	Ti-color	Ti-color
Casting	Aluminum	Aluminum	Aluminum	Aluminum	Aluminum	Aluminum	Aluminum	Aluminum	Aluminum	Aluminum	Aluminum
Feature	Hydraulic Adjust-Rebound	–	Remote Hydraulic Lock-Out	Hydraulic Lock-Out	Hydraulic Adjust- Rebound	–	Remote Hydraulic Lock-Out	Hydraulic Lock-Out	Hydraulic Adjust-Rebound	Mechanical Lock-Out	–
Spring	Oil (R), Coil/MCU (L)	Coil/MCU	Oil (R), Coil/MCU (L)	Oil (R), Coil/MCU (L)	Oil (R),Coil/MCU(L)	Coil/MCU	Oil (R), Coil/MCU (L)	Oil (R), Coil/MCU (L)	Oil (R), Coil/MCU (L)	Coil/MCU	Coil/MCU
Adjustment	R, P	P	RL, C, P	L, C, P	R, P	P	RL, C, P	L, C, P	R, P	L, P	P
Travel (mm)	100, 130 mm	100, 130 mm	100, 110 mm	100, 110 mm	100, 110 mm	100, 110 mm	80, 100 mm	80, 100 mm	80, 100 mm	80, 100 mm	80, 100 mm
Fork height (mm)	480 / 510		480 / 490				460 / 480				
Boot	n/a	n/a	n/a	n/a	n/a	n/a	n/a	n/a	n/a	n/a	n/a
Disc Brake Mount	yes	yes	yes	yes	yes	yes	yes	yes	yes	yes	yes
Dynamo Bracket Mount	–	–	–	–	–	–	–	–	–	–	–
Cable Guide for Hub Dynamo	–	–	–	–	–	–	–	–	–	–	–
Remote Lockout option	–	–	–	yes	–	–	–	yes	–	–	–
Roller Brake Mount	–	–	–	–	–	–	–	–	–	–	–
Weight (kgs) (w/o steerer)	2.40	2.37	2.23	2.18	2.18	2.15	2.18	2.13	2.13	1.90	2.10
Wheel size	26”	26”	26”	26”	26”	26”	26”	26”	26”	26”	26”
Availability	April 07	April 07	April 07	April 07	April 07	April 07	April 07	April 07	April 07	April 07	April 07
Origin of Production	China	China	China	China	China	China	China	China	China	China	China
2008 VS 2007	–	Launch-T7	New	New	New	New	New	New	New	New	New
Brake Pivot Boss	no pivot boss lower available		no pivot boss lower available				no pivot boss lower available				
Remarks	MONTAGUE CLIX compatible (MSR)		MONTAGUE CLIX compatible (ASR)				MONTAGUE CLIX compatible (ASR)				
Bike Category	Dirt Jump		XC				XC				

RST 2008 PRODUCTS SPECIFICATION

Name	CAPA			CAPA-20		VITA			TR-PRO			NEON			
Model	ML	T8	C8	T8	C8	RL	TnL	T8	RL - 7/6	TnL - 7/6	T8 - 7/6	RL - 7/6	TnL - 7/6	ML - 7/6	T8 - 7/6
Steerer	28.6/25.4	28.6/25.4	28.6/25.4	28.6/25.4	28.6/25.4	28.6/25.4	28.6/25.4	28.6/25.4	28.6/25.4	28.6/25.4	28.6/25.4	28.6/25.4	28.6/25.4	28.6/25.4	28.6/25.4
Crown	120mm	120mm	120mm	120mm	120mm	112mm	112mm	112mm	107mm	107mm	107mm	112mm	112mm	112mm	112mm
	Aluminum, Satin Black	Aluminum, Satin Black	Aluminum, Satin Black	Aluminum, Satin Black	Aluminum, Satin Black	Aluminum, Shiny Black	Aluminum, Shiny Black	Aluminum, Shiny Black	Aluminum, Shiny Black	Aluminum, Shiny Black	Aluminum, Shiny Black	Aluminum, Shiny Black	Aluminum, Shiny Black	Aluminum, Shiny Black	Aluminum, Shiny Black
Stanchion	25.4 steel	25.4 steel	25.4 steel	25.4 steel	25.4 steel	28.6 steel	28.6 steel	28.6 steel	25.4 steel	25.4 steel	25.4 steel	25.4 steel	25.4 steel	25.4 steel	25.4 steel
	CP	CP	CP	CP	CP	Ti-color	Ti-color	Ti-color	CP	CP	CP	Ti-color	Ti-color	Ti-color	Ti-color
Casting	Aluminum	Aluminum	Aluminum	Aluminum	Aluminum	Magnesium	Magnesium	Magnesium	Magnesium	Magnesium	Magnesium	Aluminum	Aluminum	Aluminum	Aluminum
Feature	Mechanical Lock-Out	–	–	–	–	Remote Hydraulic Lock-Out	Hydraulic Lock-Out	–	Remote Hydraulic Lock-Out	Hydraulic Lock-Out	–	Remote Hydraulic Lock-Out	Hydraulic Lock-Out	Mechanical Lock-Out	–
Spring	Coil/MCU	Coil/MCU	Coil Spring	Coil Spring	Coil Spring	Oil (R), Coil/MCU (L)	Oil (R), Coil/MCU (L)	Coil/MCU	Oil (R), Coil/MCU (L)	Oil (R), Coil/MCU (L)	Coil/MCU	Oil (R), Coil/MCU (L)	Oil (R), Coil/MCU (L)	Coil/MCU	Coil/MCU
Adjustment	L, P	P	–	P	–	RL, C, P	L, C, P	P	RL, C, P	L, C, P	P	RL, C, P	L, C, P	L, P	P
Travel (mm)	26”/24”: 80/50mm	26”/24”: 80/50mm	26”/24”: 80/50mm	2” (50mm)	2” (50mm)	60 mm	60 mm	60 mm	2” (50mm)	2” (50mm)	2” (50mm)	700C: 60mm 26”: 75mm	700C: 60mm 26”: 75mm	700C: 60mm 26”: 75mm	700C: 60mm 26”: 75mm
Fork height (mm)	460 / 399			373		470			460 / 448			470 / 465			
Boot	n/a	n/a	n/a	n/a	n/a	n/a	n/a	n/a	n/a	n/a	n/a	n/a	n/a	n/a	n/a
Disc Brake Mount	yes	yes	yes	yes	yes	yes	yes	yes	yes	yes	yes	yes	yes	yes	yes
Dynamo Bracket Mount	–	–	–	–	–	yes	yes	yes	yes	yes	yes	yes	yes	yes	yes
Cable Guide for Hub Dynamo	–	–	–	–	–	option	option	option	option	option	option	option	option	option	option
Remote Lockout option	–	–	–	–	–	–	yes	–	–	yes	–	–	yes	–	–
Roller Brake Mount	–	–	–	–	–	no	no	no	no	no	no	no	no	no	no
Weight (kgs) (w/o steerer)	1.70/1.60	1.90/1.80	1.86/1.76	1.65	1.65	1.83	1.78	1.75	1.58	1.53	1.50	2.01	1.96	1.73	1.93
Wheel size	Available for 26”/24”	Available for 26”/24”	Available for 26”/24”	20” only	20” only	700C only	700C only	700C only	7:700C 6:26”	7:700C 6:26”	7:700C 6:26”	7:700C 6:26”	7:700C 6:26”	7:700C 6:26”	7:700C 6:26”
Availability	April 07	April 07	April 07	April 07	April 07	April 07	April 07	April 07	April 07	April 07	April 07	April 07	April 07	April 07	April 07
Origin of Production	China	China	China	China	China	China	China	China	China	China	China	China	China	China	China
2008 VS 2007	–	Capa-T7	Capa-C7	200K	200K	Vogue-RL	Vogue-TnL	Vogue-T7	–	–	TR-PRO-T7	–	–	–	Neon-T7
Brake Pivot Boss	mudguard eyelet available			–		no pivot boss lower available			–			–			
Remarks	MONTAGUE CLIX compatible (ASR) (26" only)			MONTAGUE CLIX compatible (MSR)		MONTAGUE CLIX compatible (MSR)			MONTAGUE CLIX compatible (MSR)			MONTAGUE CLIX compatible (700c :ASR) (26” :MSR)			
Bike Category	XC			Kids or Recumbent		Cross (Straight Lower)			Trekking (Curve Lower)			Cross (Straight Lower)			

RST 2008 PRODUCTS SPECIFICATION

Name	SOFI					TRENDY					191			777			790	
Model	RL- 7/6	TnL- 7/6	ML- 7/6	T8- 7/6	RL- 7/6	TnL- 7/6	ML- 7/6	T8 - 7/6	T8	C8	T8	C8	T8	C8	T8 - 7/6/4	C8 - 7/6/4
Steerer	28.6/25.4	28.6/25.4	28.6/25.4	28.6/25.4	28.6/25.4	28.6/25.4	28.6/25.4	28.6/25.4	28.6/25.4	28.6/25.4	28.6/25.4	28.6/25.4	28.6/25.4	28.6/25.4	28.6/25.4	28.6/25.4
Crown	107mm	107mm	107mm	107mm	107mm	107mm	107mm	107mm	125mm	125mm	112mm	112mm	107mm	112mm	107mm	107mm
	Aluminum, Shiny Black	Aluminum, Shiny Black	Aluminum, Shiny Black	Aluminum, Shiny Black	Aluminum, Shiny Black	Aluminum, Shiny Black	Aluminum, Shiny Black	Aluminum, Shiny Black	Aluminum, Satin Black	Aluminum, Satin Black	Aluminum, Shiny Black	Aluminum, Shiny Black	Aluminum, Shiny Black	Aluminum, Shiny Black	Aluminum, Shiny Black	Aluminum, Shiny Black
Stanchion	25.4 steel	25.4 steel	25.4 steel	25.4 steel	25.4 steel	25.4 steel	25.4 steel	25.4 steel	28.6 steel	28.6 steel	25.4 steel	25.4 steel	25.4 steel	25.4 steel	25.4 steel	25.4 steel
Casting	CP	CP	CP	CP	CP	CP	CP	CP	CP	CP	CP	CP	CP	CP	CP	CP
	Aluminum	Aluminum	Aluminum	Aluminum	Aluminum	Aluminum	Aluminum	Aluminum	Steel	Steel	Steel	Steel	Steel	Steel	Steel	Steel
Feature	Remote Hydraulic Lock-Out	Hydraulic Lock-Out	Mechanical Lock-Out	–	Remote Hydraulic Lock-Out	Hydraulic Lock-Out	Mechanical Lock-Out	–	–	–	–	–	–	–	–	–
Spring	Oil (R), Coil/MCU (L)	Oil (R), Coil/MCU (L)	Coil/MCU	Coil/MCU	Oil (R), Coil/MCU (L)	Oil (R), Coil/MCU (L)	Coil/MCU	Coil/MCU	Coil/MCU	Coil Spring	Coil/MCU	Coil Spring	Coil/MCU	Coil Spring	Coil/MCU	Coil Spring
Adjustment	RL, C, P	L, C, P	L, P	P	RL, C, P	L, C, P	L, P	P	P	–	P	–	P	–	P	–
Travel (mm)	2" (50mm)	2" (50mm)	2" (50mm)	2" (50mm)	2" (50mm)	2" (50mm)	2" (50mm)	2" (50mm)	26"/24"/20": 80/50/35mm	26"/24"/20": 80/50/35mm	50mm	50mm	2"/2"/40mm	50mm	2"/2"/40mm	2"/2"/40mm
Fork height (mm)	460 / 450				460 / 450				460 / 398 / 337		460		460 / 438 / 407			
Boot	n/a	n/a	n/a	n/a	n/a	n/a	n/a	n/a	mini	mini	mini	mini	mini	mini	mini	mini
Disc Brake Mount	no	no	no	no	no	no	no	no	yes	yes	no	no	no	no	no	no
Dynamo Bracket Mount	yes	yes	yes	yes	yes	yes	yes	yes	–	–	–	–	yes	–	yes	yes
Cable Guide for Hub Dynamo	option	option	option	option	yes	yes	yes	yes	–	–	–	–	no	–	no	no
Remote Lockout option	–	yes	–	–	–	yes	–	–	–	–	–	–	–	–	–	–
Roller Brake Mount	no	no	no	no	no	no	no	no	–	–	option	option	option	option	option	option
Weight (kgs) (w/o steerer)	1.81	1.76	1.53	1.73	1.91	1.86	1.63	1.83	2.10	2.10	2.05	2.05	1.70	2.05	1.70	1.70
Wheel size	7:700C 6:26"	7:700C 6:26"	7:700C 6:26"	7:700C 6:26"	7:700C 6:26"	7:700C 6:26"	7:700C 6:26"	7:700C 6:26"	Available for 26/24/20"	Available for 26/24/20"	700C only	700C only	7: 700C 6: 26" 4: 24"	700C only	7: 700C 6: 26" 4: 24"	7: 700C 6: 26" 4: 24"
Availability	April 07	April 07	April 07	April 07	April 07	April 07	April 07	April 07	April 07	April 07	April 07	April 07	April 07	April 07	April 07	April 07
Origin of Production	China	China	China	China	China	China	China	China	China	China	China	China	China	China	China	China
2008 VS 2007	New	New	New	New	–	Trendy-T7	–	New Crown 191-T7	New Crown 191-C7	New Crown 191-C7	777-T7	777-C7	790-T7	777-C7	790-T7	790-C7
Brake Pivot Boss	–				–			–								
Remarks	MONTAGUE CLIX compatible (700c :ASR) (26" :MSR)				MONTAGUE CLIX compatible (MSR)				MONTAGUE CLIX compatible (ASR)		MONTAGUE CLIX compatible (ASR)		MONTAGUE CLIX compatible (MSR)		MONTAGUE CLIX compatible (MSR)	
Bike Category	Trekking (Curve Lower)				Trekking with Tunnel cable guide				XC		Cross (Straight Lower)		Trekking (Curve Lower)			

INT'L DISTEIBUTORS

Argentina
Osvaldo A. Freier S.R.L.
Tel : 5411-4442-1751
Fax: 5411-4442-1756

Austria
Thalinger Lange GMBH
Tel : 43-7242-497260
Fax: 43-7242-497401

Australia
Avanti Bicycle Co.,Ltd.
Tel : 03-9586-8300
Fax: 03-9586-8301

Brasil
LM BIKE
Tel :+55-37-3261-9480

Canada
D`amour Bicycle & Sports.
Tel : 1-514-637-6511
Fax: 1-514-637-7999

Chile
Teknobike LTDA.
Tel : 562-6720236
Fax: 562-6722273

Colombia
BICICLETAS MILAN
TEL : 57-7-6711707
FAX : 57-7-6714552

Costa Rica
DISTRIBUIDORA 86 S.R.L.
TEL : 506-445-6669
FAX : 506-445-6185

Czech/Slovak Republic
Universe Agency /
Universe Slovakia
Tel : 420-2-2491-9143
Fax: 420-2-2491-8139

Estonia
Velo Plus.
Tel : 372-2-555-577
Fax: 372-6-556-308

Finland
Uimonen Trading
Tel : 358-3-3565-400
Fax: 358-3-2656-700

France
RST-Paul Lange France
SARL.
Tel : 06-03-462927
Fax: 03-88-933432

Germany
Paul Lange & Co.
Tel : 49-711-258802
Fax: 49-711-2588305

Greece
Nikos Maniatopoulos
S.A.
Tel : 30-2610-993045
Fax: 30-2610-990424

Holland
Cyclia bv
Tel : 31-(0)20-6692936
Fax: 31-(0)20-6154589

Hungary
Velotrade Ltd.
Tel : 36-1-455-8010
Fax: 36-1-455-8019

Indonesia
Happy Mountain Bicycle
Tel : 62-21-452-3647
Fax: 62-21-452-3647

Israel
Intcom.
Tel : 972-8-9200060
Fax: 972-8-9200061

Italy
Ciclo Promo Components
SPA
Tel : 39-0424-574280
Fax: 39-0424-84939

Japan
AKI Corporation, Ltd.
Tel : 81-72-887-5515
Fax: 81-72-887-5517

Korea
MBS Corporation
Tel :82-55-265-9415
Fax:82-55-265-9419

New Zealand
Sheppard Industries, Ltd.
Tel : 64-9-915-5770
Fax: 64-9-915-5902

Norway
Deler A/S
Tel : 47-2305-1370
Fax: 47-2305-1375

Poland
Velo Sp. Z. O. O.
Tel : 48-32-232-83-77
Fax: 48-32-232-83-80

Portugal
Motokit
Tel :351-34-625607
Fax:351-34-625608

Russia
Velomotors Co.,Ltd.
Tel:+7-095-559-0200
Fax:+7-095-559-1458

Slovenia/ Croatia
CS-EUROTRADE d.o.o.
Tel : 386-7-49-02-500
Fax: 386-7-49-02-549

Switzerland
Fuchs-movesa AG
Tel : 62-865-66-06
Fax: 62-865-66-09

South Africa
Dragons Sports, Ltd.
Tel : 27-21-461-6252
Fax: 27-21-461-9273

Ukraine
Paul Lange UKraine
Tel : 38-004-3571-466
Fax: 38-004-4943-651

U.S.A
Quality Bicycle Products
Tel : 1-800-346-0004
Fax: 1-800-346-0211

Taiwan
Kingdamper Ind. Co.,Ltd.
Tel : 886-2-8521-8656
Fax: 886-2-8521-8859
www.rstlife.com