English (U)

SHIMANO DEORE XT II

Deore XT-II. The hot new component group that defines the standard in performance for the all-terrain racing bicycle. Heavy-duty durability and advanced new features like Hyperglide sprockets, HP Biopace chainrings, and 'two finger' SLR brake performance give Deore XT-II the competitive advantage.

SHIMANO

Refined Functions Put You in Total Control

Introducing Deore XT-II. The high-performance off-road component group that represents the pinnacle of Shimano human-engineering technology.

Deore XT-II's advanced functions can really make a difference in competition. There's a new 7-speed SIS which delivers a wider gear selection for better cadence control. Computer-designed Hyperglide sprockets provide significantly improved SIS shifting speed and smoothness.

Designed for the higher RPM's of high-performance off-road cycling, HP Biopace chainrings use leg power more efficiently. An amazingly responsive "two finger" SLR brake system offers the best balance yet of finely modulated control and brute braking power.

And that's not all. Every component in the new Deore XT-II group offers more quality, durability, and performance than ever.

Deore XT-II means total control plus. Another breakthrough in component technology from Shimano.

TOTAL CON

SHIMANO AMERICAN CORPORATION
One Shimano Drive Irvine, California, U.S.A. 92718 Tel. 714-951-5003

SHIMANO (EUROPA) GmbH.
Kleinhulsen 1-3, 4010 Hilden, West Germany Tel. 02103-5005-0

SHIMANO (SINGAPORE) PTE. LTD.
No. 20, Benoi Sector, Jurong Town, Singapore 2262 Tel. 265477

SIS
SHIMANO INDEX SYSTEM

7 SPEED SIS: Get a Wider Range of Gear Choices

Not only for the off-road racer, the new 7-speed SIS can give all off-road cyclists a wider gearing choice that means better use of energy through finer cadence control.

HG
HYPERGLIDE

HG: Hyperglide Sprockets Enhance SIS Shifting

SIS performance has been significantly improved with the Hyperglide sprocket. It makes shifting faster and smoother than ever, especially under demanding conditions.

THE SHIMANO
FREEHUB

ATB FREEHUB: A Stronger Rear Wheel

The Shimano freehub can take all the punishment of heavy duty off-road cycling. Uni-balance design, wider bearing placement, less wheel dish, and sealed mechanisms make the freehub ideal for the all-terrain bike.

SLR
SHIMANO LINEAR RESPONSE

SLR: Powerful Fingertip Braking Control

SLR's sensitive linear response lever feeling and U-Brake with Power Plate (U-II Brake) mean two fingers are all you need for dynamite braking power with precise modulated control.

biopace
COMPUTER DESIGNED DRIVE SYSTEM

HP BIOPACE: Biopace Goes Off-Road Racing

HP is the new high-performance version of the Biopace chainring that provides greater pedaling efficiency at the higher cadences used by performance-oriented off road cyclists.

TROL PLUS

SHIMANO DEORE XT II

SHIMANO INDUSTRIAL CO., LTD
3-77 Oimatsucho, Sakai, Osaka, Japan Tel. 0722-23-3243

Specifications are subject to change without notice. © Aug. 1988 by Shimano Industrial Co., Ltd. 0688 Printed in Japan XBC IZM

This is Why Off-Road SIS Shifts Faster and Smoother than Ever

SIS
SHIMANO INDEX SYSTEM

A Whole New World of Shifting Performance

With SIS, shifting enters the digital age. One quick click of the SIS thumb shifter and you're in the gear you want, when you want it. This means no more misshifts under high pedaling forces.

SIS gives you an extra margin of safety because you can shift gears quickly and accurately without losing concentration on the terrain ahead.

And now 7-speed SIS offers a wider gear selection that lets you tune pedaling cadence more precisely according to terrain and energy, something especially valuable for high-performance cyclists.

On or off road, SIS is a new world of shifting performance.

HG
HYPERGLIDE

A New Refinement in SIS Shifting

The Hyperglide sprocket significantly improves SIS shifting for the ATB. Here's how.

When conventional cog systems shift to a lower gear, the chain rides on top of the sprocket teeth for a moment before seating fully on the next cog. This 'over-ride' results in a slight hesitation, and sometimes even chain slippage, before the chain can fall in place and fully engage the gear teeth.

Hyperglide cogs incorporate special chain "release" teeth that have a thinner cross section than other teeth on the sprocket. These teeth determine exactly at what point the chain will begin to shift from the smaller cog. Strategically alined with the release teeth, are specially designed "pick up" teeth on the next largest cog, that pull the chain up. This means that the sprockets are positioned so their teeth maintain the same spacing as the chain links at the point where the chain releases from the smaller cog and moves toward the larger cog.

The result is that the chain moves more directly from gear to gear without over-ride. SIS shifting is executed faster, quieter, and smoother, even under high pedaling forces.

U.S. PAT. 4,268,259

Shifting Lever

SL-M732

●182g. ●7-speed SIS (Shimano Index System) ●SIS/Friction one touch switch mode, Light Action Mechanism, Low Profile Design, 3-Step Lever Adjustment, Digital Adjustment Mechanism, Sealed SP Cable Outer Casing, Sealed Cable Guide ●Light Alloy ●Handleber Use ●Lever Clamp Diameter: 22.2mm. ●For SIS Function, use with RD-M732 Rear Derailleur/FH-M732 Freehub/Shimano SIS-SP Outer Casing with Liner/CN-M732 Narrow Type Chain

7-SPEED SIS

Freehub

FH-M732-QR (6 & 7-speed Quick Release Type)
CS-M732 (Hyperglide Sprockets)
HB-M730-F (Front Hub)

●Front: 231g. (Quick Release Type), Rear (Except Sprockets): 490g. (Quick Release Type), Sprocket (12, 14, 16, 18, 21, 24, 28T.) & Spacer: 325g. ●6 & 7-speed SIS Compatible ●7-speed Hyperglide Gear Compatible ●One Piece Forged Hub Body, Ball Race Banishing, Bolt-Secured Freewheel, Lip-Type Sealed Mechanism, Superior Hub Axle Support, High Strength Freewheel Body, Lubricating Port with Open/Close ●Light Alloy•Buff Finish (Black Finish Available) ●Over Lock Nut Dimensions: Front: 100mm., Rear: 130mm., 135mm. ●28H, 32H, 36H (Front), 32H, 36H (Rear) ●Spoke Hole: 14G ●Sprocket Combinations:

7-speed	12, 14, 16, 18, 21, 24, 28T.
(Hyperglide)	13, 15, 17, 20, 23, 26, 30T.

*For HG Function use Hyperglide Compatible Chain (CN-M732/CN-MT62)

HG 7-SPEED SIS

Rear Derailleur

RD-M732-SGS (Super Long Cage)

●Super Long: 270g. ●7-speed SIS Compatible ●Double Servo-Panta Mechanism, Centeron Guide Pulley, Ceramic Guide Pulley Bushing, Sealed Pulley, Sealed Pivot Axles, Sealed Link Pivots, Sealed Mechanism, Digital Adjust Mechanism, B-Tension Adjustment Bolt, Brass Bushing & Stainless Steel Pins in Link Pivots, Double Spoke Barrier, Chain Retainer ●Maximum Rear Sprocket: Super Long: 28T.~32T. (Using SFR, SF Fork End) ●Minimum Rear Sprocket: 12T. ●Maximum Front & Rear Sprocket Difference: Super Long: 38T. ●Light Alloy

7-SPEED SIS

Front Derailleur

FD-M732

●116g. (Normal Band Type) ●Trailing Action Pantagraph Mechanism,Rigid Chainguide, New Trapease Mechanism, Narrow Type Chain Compatible, Sealed Link Pivot ●Forged Light Alloy (Right Link), Light Alloy (Clamp Band), Heat Threated Steel•Chrome Plated (Chain Guide)

Capacity (Front gear difference)	FD-M732-AL (Alpine)	Biopace gear (CR-BP15) .....8T.~24T.
	FD-M732-HS (Half-step)	Biopace gear (CR-BP15) .....5T.~24T.
Band diameter	Band type	.....Ø28.0~28.6mm.
	EC-type (End-less clamp type)	.....Ø1-1/4", 1-3/8"

UG Chain

CN-M732

●Hyperglide Gear Compatible ●Narrow Type Uniglide Chain, Bushingless Design ●Steel ●Roller Link Plate: Black Finish, Pin Link Plate: Silver Finish

HG 7-SPEED SIS

SLR Realizes the Best of Both Worlds: Awesome Braking Power with Fingertip Control

SLR
SHIMANO LINEAR RESPONSE

Stop with More Power and Control.

Keep your grip on the bars because two fingers are all you need to activate dynamite braking power with Deore XT-II's new SLR system.

Shimano Linear Response provides exceptionally strong braking power and fine modulated lever control for all Shimano off-road brake systems.

SLR gives off-road cyclists the confidence that helps them realize their performance potential.

U-II Brake

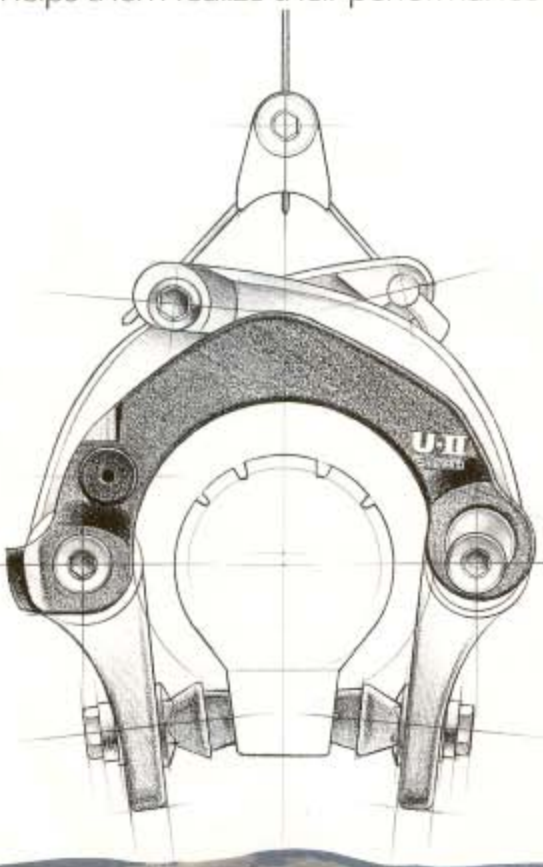

The Best of Both Worlds

With the rigidity of a cantilever and the power multiplication of a center-pull caliper, the Shimano U-Brake with Power Plate (U-II Brake) is the new standard in under the chainstay brakes.

U-II Brake features a booster adapter plate that braces the chainstay and keeps it from moving while the brake is operating, which increases stopping power and braking linearity.

U-II Brake

BR-M733

●357g. 1 unit ●SLR (Shimano Linear Response) System ●Sealed Internal Spring Design, Rigid Computer Designed Shape, Spring Tension Adjuster, Internal and Sealed Spring Design, Power Pad Low-Profile Brake Shoe, Power Plate with Shark Tooth ●Light Alloy

*For SLR system use BR-M733/BR-M732, BL-M732/BL-M733, and Shimano Outer Cable with Liner.

Cantilever Brake

BR-M732

●185g. Pair ●SLR (Shimano Linear Response) System ●Rigid Computer Designed Shape, Sealed Internal Spring Design, Spring Tension Adjuster, Low-Profile Brake Shoe, Anti-Fall-In Shoe, Easy Cable Attachment ●Light Alloy• Buff Finish (Black Finish Available)

*For SLR system use BR-M732/BR-M733, BL-M732/BL-M733, and Shimano Outer Cable with Liner.

Brake Lever

BL-M732 (4-finger Type)
BL-M733 (2-finger Type)

●284g. Pair, 2-finger ●SLR (Shimano Linear Response) System ●Return Spring, Safety Clamp Design, Digital Lever-Reach Adjustment (4 Positions), Cable Adjustment, 2mm. Diameter Inner Cable Available ●Forged Light Alloy ●Lever Clamp Diameter: 22.2mm. ●Color: Black ●Rubber Covers

Head Parts

HP-M730

●110g. ●Off-Road Type ●Sealed Mechanism, Inside Vapor Corrosion Inhibitor Seal Tape for Head Tube, Stainless Steel Lower Cup & Cone ● Light Alloy•Black Anodized Finish (Lock Nut), Steel & Rubber•Black Finish (Upper Cup), Stainless •Black Finish (Lower Cup), Stainless Steel (Lower Cone) ●Height: Lower Stack 11.5mm., Total Stack 33.0mm.

●Variations:

Type	Thread	Press Race Diameter	
		Upper Cone & Lower Cup	Lower Cone
English/ Italian	BCI ×24T.	30.2mm.	26.4mm.

HP Biopace Means Upgraded Pedaling Performance for Off-Road Racers and Hard-Charging Trail Riders

biopace
COMPUTER DESIGNED DRIVE SYSTEM

High-Performance Pedaling Efficiency

Shimano applied computer technology to develop a chainring that makes more efficient use of leg power. It's called Biopace

Biopace is not a simple oval. It's called a 'point symmetrical shape.' This special shape acts to continuously adjust crank speed to more closely match the natural speed changes of the leg when pedaling.

The result is that using Biopace actually saves energy. You can ride farther with more comfort and less fatigue. Hills are easier to climb too.

Now HP Biopace provides the advantages of Biopace at the higher pedaling cadences used by performance-oriented cyclists and off-road racers.

HP Biopace shifts beautifully too because it's been specifically designed to eliminate the shifting problems inherent in triple cranksets.

HP Biopace The new shape of high-performance pedaling efficiency.

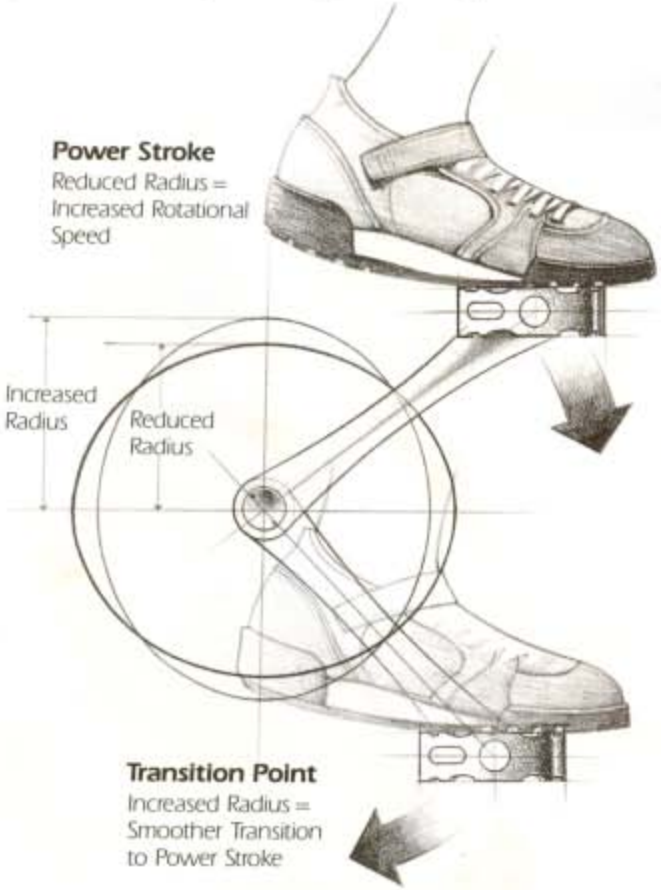

How it Works

Although there are more complex factors involved, here's basically how Biopace works. Chainwheel radius is decreased as the crank enters the downward power stroke. This allows the leg to push faster, much as it does naturally when walking or running. As the leg makes the transition from the power stroke to the return stroke at the bottom of its travel, chainwheel radius increases. This helps the leg to make better use of momentum gained on the power stroke, again a more natural movement. This area also reduces the energy-wasting 'bump' effect felt at the bottom of the crank stroke with round chainwheels. Instead of forcing the leg to conform to a purely mechanical movement, Biopace adjusts crank speed to more closely match the natural movement of the leg as it rotates. This smoothes out the transition between muscle groups and creates a more efficient pedaling motion.

Front Chainwheel & Bottom Bracket Assembly

FC-M730 (High Performance Biopace Triple, MD Type)
BB-M730 (B.B. Set)

●730g. (26T., 36T., 46T., 170mm.), 310g. B.B. Set ●High Performance Biopace Chainrings, Low Profile Design, Computer Aided Design, Sealed Mechanism ●Light Alloy•Anodized Finish (Black Finish Available) ●For 1/2" × 3/32" Chain ●Inner 26T., 28T., Middle 36T., 38T., 44T., Outer 46T., 48T., 50T. ●Crank Length: 165mm., 170mm., 175mm., 180mm. ●Crank Thread: English BC 9/16" × 20T.P.I. ●Cup Thread: English 1.37 × 24T.P.I., Italian M36 × 24T.P.I. ●B.B. Size: 68-T-117.5 (D-3A), 68-T-122.5 (D-3NL), 70-T-117.5 (D-5A) ●Bolt Circle Diameter: Inner; 74mm., Outer & Middle; 110mm. (MD Type)

biopace-HP

Pedal

PD-M730
PD-M731 (Comp Type)

●412g. (PD-M730 Pair), 363g. (PD-M731 Pair) ●Low Profile Design, Parallelogram Shape (PD-M730), Contact-Type Sealed Mechanism, Stainless Steel Grip Pins, Toe Clip/Reflector Attachable ●Light Alloy (Body & Plate), Cr-Mo Steel (Axle) ●Crank Thread: English BC 9/16" × 20T.P.I.

Seat Pillar Quick-Release

SQ-M730

●73g. ●Easy Operation, Position-Set Spring ●Steel ●Shaft Adjustment Length: 36 ~ 43mm., 26 ~ 33mm. ●Shaft Diameter: Ø6mm. or Ø8mm.

Chain Deflector

DF-M730 (Shark Fin)

●9g. ●Keeps the chain from jamming between the tire and chainstay ●Resin

Seat Pillar

SP-M730

●296g. (330mm.) ●High Strength Structure, Light Weight, Long Size ●Cr-Mo Steel ●Outside Diameter: 26.6mm., 26.8mm., 27.0mm. ●Length: 280mm., 330mm.

SHIMANO DEORE II

Deore II is the high-performance component group for those who take their off-road riding seriously. Advanced new functions like Hyperglide sprockets, HP Biopace chainrings, and SLR brake system let you ride all-out with complete control.

SHIMANO

Deore II Takes On the Great Outdoors.

This is the high-performance off-road component group that's ready to go as far as you want to take it.

Deore II is a quality, performance-minded component group incorporating many of the advanced features of Deore XT-II. Features like High-Performance Biopace, Hyperglide sprockets, and U-II Brake/cantilever SLR brake system make Deore II the perfect group for off-road riders who like to push their personal performance to the limit.

The ATB equipped with Deore II realizes the best balance of quality, performance, and value available today in the off-road market.

Shifting Lever

SL-MT62

●232g. Pair ●7-speed SIS (Shimano Index System) ●SIS/Friction One Touch Switch Mode, Light Action Mechanism, Digital Adjustment Mechanism, Sealed SP Cable Casing, Sealed Cable Guide ●Light Alloy ●Handlebar Use ●Lever Clamp Diameter: 22.2mm. ●For SIS Function, Use with RD-MT62, RD-M732 Rear Derailleur/FH-MT62, FH-M732 Freehub/Shimano SIS-SP Outer Casing with Liner/CN-MT62, CN-M732 Narrow Type Chain

7-SPEED SIS

Front Derailleur

FD-MT62

●117g. (Normal Band Type) ●Trailing Action Pantagraph Mechanism, New Trapease Mechanism, Rigid Chainguide, Narrow Type Chain Compatible ●Light Alloy (Body & Clamp Band), Heat Treated Steel•Chrome Plated (Chainguide)

Capacity (Front gear difference)	FD-MT62-AL (Alpine)	Biopace gear (CR-BP10) .....8T.~24T.
	FD-MT62-HS (Half-step)	Biopace gear (CR-BP10) .....5T.~24T.
Band diameter	Band type.....	Ø28.0~28.6mm
	EC-type (End-less clamp type)	.....Ø1-1/4", 1-3/8"

Rear Derailleur

RD-MT62-SGS (Super Long Cage)

●Super Long: 310g. ●7-speed SIS Compatible ●Double Servo Panta Mechanism, Centeron Guide Pulley, Sealed Pulley, Sealed Pivot Axles, Sealed Link Pivots, Sealed Mechanism, Digital Adjust Mechanism, B-Tension Adjustment Bolt, Brass Pivot Bushing & Heat Treated Steel Pins in Link Pivots, Double Spoke Barrier, Chain Retainer ●Maximum Rear Sprockets: Super Long; 28T.~32T. (Using SFR, SF Fork Ends) ●Minimum Rear Sprockets: 12T. ●Maximum Front & Rear Sprocket Difference: Super Long; 38T. ●Light Alloy

7-SPEED SIS

Freehub

FH-MT62-QR (6 & 7-speed, Quick Release Type)
CS-MT62 (Hyperglide Sprockets)
HB-MT60-F (Front Hub)

●Front: 231g. (Quick Release Type), Rear (Except Sprocket): 450g. (Quick Release Type), Sprocket (7-speed, 13T.~30T.) & Spacer: 325g. ●6 & 7-speed SIS Compatible ●7-speed Hyperglide Gear Compatible ●One Piece Forged Body, Ball Race Banishing, Bolt-Secured Freewheel, Contact type Sealed Mechanism, High Strength Freewheel Body ●Light Alloy (Hub Shell), Cr-Mo Steel•Black Finish (Axle), Steel•Silver Finish (Sprocket) ●Over Lock Nut Dimensions: Front; 100mm., Rear; 130mm., 135mm. ●Spoke Holes: 32H., 36H. ●Spoke Hole Diameter: Ø2.6mm. ●For 1/2" × 3/32" Chain

7-SPEED HG SIS

●Standard Sprocket Combinations:

7-speed	12, 14, 16, 18, 21, 24, 28T.
(Hyperglide)	13, 15, 17, 20, 23, 26, 30T.

*For HG Function use Hyperglide Compatible Chain (CN-MT62/CN-M732)

UG Chain

CN-MT62

●Hyperglide Gear Compatible ●Narrow Type Uniglide Chain, Bushingless Design ●Steel

HG

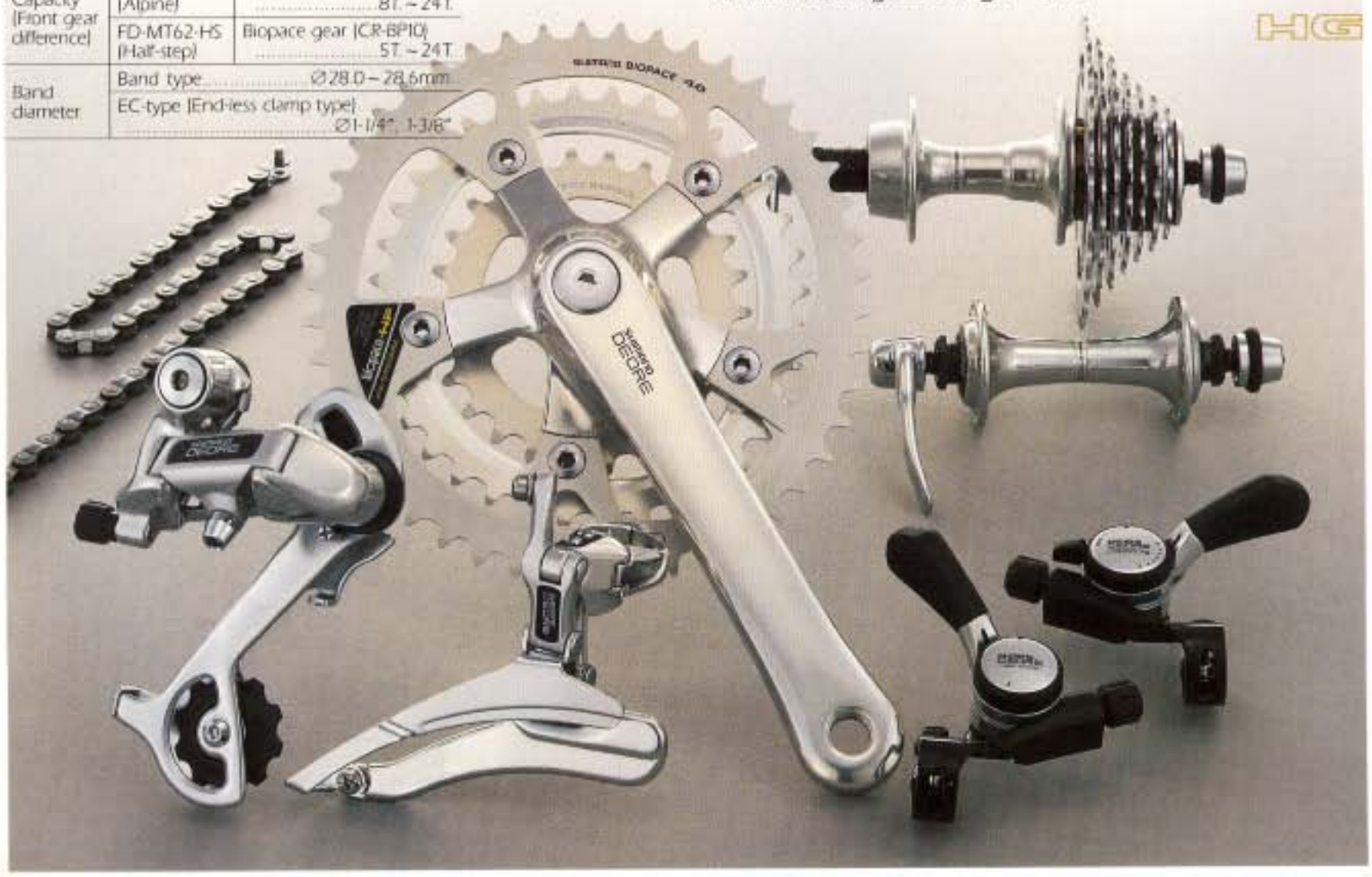

Front Chainwheel & Bottom Bracket Assembly

FC-MT60 (High Performance Biopace Triple, MD Type)
BB-MT60 (B.B. Set)

•740g. (28T., 38T., 48T., 170mm.), 320g. B.B. Set •High Performance Biopace Chainring, Low Profile Design, One-Piece Forged Crank, Computer Aided Design, Sealed Mechanism (B.B. Set) •Light Alloy•Anodized Finish (Crank & Chain Ring), Cr-Mo Steel•Brack Finish (Axle) •Teeth: Inner; 26T., 28T., Middle; 36T., 38T., 44T., Outer; 46T., 48T., 50T. •Crank Length: 170mm., 175mm. •Crank Thread: BC 9/16" × 20T.P.I. •Cup Thread: English BC 1.37 × 24T.P.I. •B.B. Size: 68-T-117.5 (D-3A), 68-T-122.5 (D-3NL) •Bolt Circle Diamter: Inner; 74mm., Outer & Middle; 110mm. (MD Type) biopace-HP

Head Parts

HP-MT60

•121g. •Off-Road Type •Sealed Mechanism, Inside Vapor Corrosion Inhibitor Seal Tape for Head Tube, Stainless Steel Lower Cone •Steel (Lock Nut), Steel & Rubber•Black Finish (Upper Cup), Steel•Black Finish (Lower Cup), Stainless Steel (Lower Cone) •Height: Lower Stack 11.5mm., Total Stack 33.5mm.
•Variations:

Type	Thread	Press Race Diameter	
		Upper Cone & Lower Cup	Lower Cone
English/ Italian	BC1 ×24T	30.2mm	26.4mm

Brake Lever

BL-MT62 (4-finger Type)
BL-MT63 (2-finger Type)

•274g. (2-finger Type, Pair) •SLR (Shimano Linear Response) System, •Return Spring, Safety Clamp Design, Digital Lever-Reach Adjustment (4 Positions), Cable Adjustment •Light Alloy •Lever Clamp Diameter: 22.2mm. •Rubber Covers (Option) SLR

U-II Brake

BR-MT63

•338g. 1 unit •SLR (Shimano Linear Response) System* •Pre-Load Spring Design, Rigid Computer Designed Shape, Chainstay Mounting Position, Spring Tension Adjuster, Internal and Sealed Spring Design, Power Pad Low-Profile Brake Shoe, Power Plate with Shark Tooth

*For SLR System use BR-MT63/BR-MT62, BL-MT62/BL-MT63, and Shimano Outer Cable with Liner. SLR

Cantilever Brake

BR-MT62

•190g. Pair •SLR (Shimano Linear Response) System* •Rigid Computer Designed Shape, Sealed Internal Spring Design, Spring Tension Adjuster, Low-Profile Brake Shoe, Anti-Fall-In Shoe, Easy Cable Attachment •Light Alloy
*For SLR system use BR-MT62/BR-MT63, BL-MT62/BL-MT63, and Shimano Outer Cable with Liner. SLR

Pedal

PD-MT60
PD-MT61 (Comp Type)

•495g. (PD-MT60 Pair), 442g. (PD-MT61 Pair) •Low Profile Design, Compact Design (PD-MT61), Contact Type Sealed Mechanism, Toe-Clip/Reflector Attachable •Light Alloy (Body), Steel•Black Finish (Cage), Cr-Mo Steel•Black Finish (Axle) •Crank Thread: BC 9/16" × 20T.P.I.