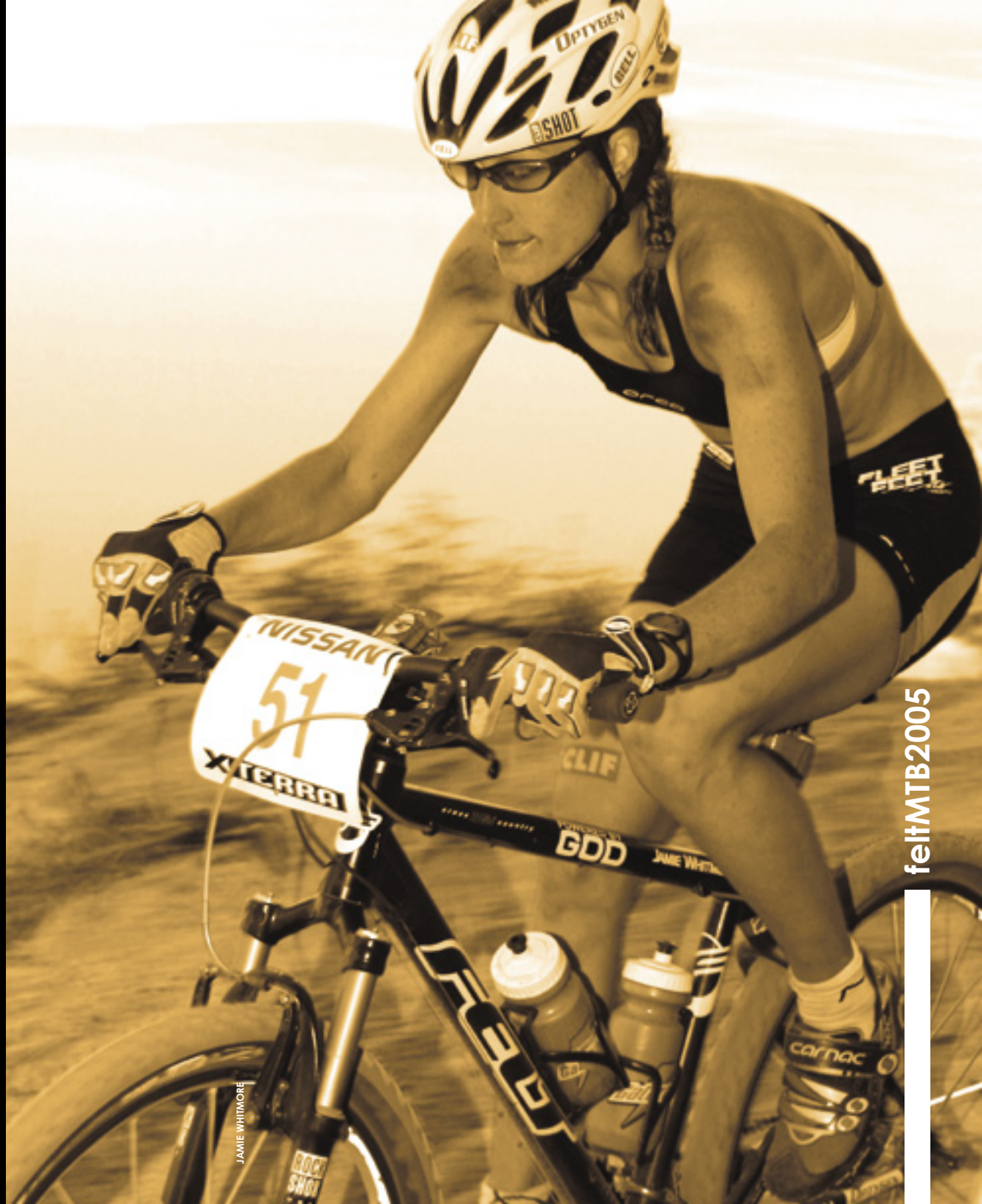

JAMIE WHITMORE

feltMTB2005

felt bicycles : 20372 hermana circle, lake forest, ca. 92630

www.feltracing.com

Felt Mountain Bikes have arrived...Entering our sixth consecutive year of selling top-notch mountain bikes internationally, overwhelming demand from the domestic market has resulted in a US introduction, and we're as excited as ever.

Much of the excitement comes from the fact that we are bringing in a narrowly focused product range, consisting of only the very best and most exclusive models Felt has to offer. We are talking about just three models from our RXC (Race X-Country) series, those using our ultra-lightweight and compliant carbon fiber seatstays.

There was a time when the term hardtail technology may have been considered an oxymoron. Not any more. Felt has utilized the latest advancements in materials applications and engineering know-how to take cross-country frames to the next level.

All this is not just about carbon fiber stays. It is about combining carbon fiber with customized Scandium or Aluminum: extracting the ideal characteristics from two materials and blending them into one seamless finished product. Felt customizes and tailors every single frame tube to our specific requirements, and the result is not only an unbelievably lightweight frameset, but also a responsive, lively, yet comfortable ride. The result is a frameset which outperforms even our own expectations; a frame which possesses ride characteristics far greater than the sum of its parts.

Our complete bikes are built up from components carefully selected to maximize performance and minimize weight (RXC Team weighs in at a mere 20.1 lbs). And you'll find only the best brand names such as Shimano, Answer/Manitou, RockShox, Mavic, as well as exclusive Felt components, such as carbon bars, stems, and seatposts. All models feature fork lockout, which many XC and X-Terra racers find a must.

Speaking of racing, the RXC Team is raced by none other than Jamie Whitmore. Jamie has won two European Championships back-to-back (2003 and 2004), as well as National Championships and NORBA Events. Jamie currently holds the record for the most wins ever in X-Terra! Also part of the Felt team is 2004 Australian Cross Country Champion and 2004 Olympian Josh Fleming, who has won or placed strong finishes throughout the 2004 world Cross-Country season.

Whether you're an X-Terra racer, a cross-country weight freak, or just a believer in simplicity through technology, Felt RXC models deliver a ride like no other.

RXC Team Frame

Sizes	15.5, 17.5, 19.5, 21.5"
Weight	1300g, (2.86 lbs)
Finish	Semi Matte Black

The ultimate XC & X-Terra frame, ridden by a true champion. Jamie Whitmore rode the RXC Team to victory in two back-to-back European XC Championships (2003 & 2004). Jamie also holds the record for most wins ever in X-Terra. Results like this speak for themselves. Felt Proprietary Superlight Easton Scandium Tubing / Felt Exclusive Carbon Fiber Seatstays, Cold Forged Dropouts, Replaceable Derailleur Hanger, Cane-Creek Integrated Head Tube, Optimized for 80mm fork travel, V-Brakes only, 1300 grams. Headset and Seat Clamp Included.

Seat Clamp	30.6mm
Seatpost	27.2mm
Front Derailleur	34.9mm Down-Pull
BB Shell	68mm

RXC TEAM

Sizes	15.5, 17.5, 19.5, 21.5"
Weight	20.1 lbs (17.5")
Finish	Semi Matte Black

We could summarize our flagship model with just seven simple yet powerful words: Scandium. Carbon. XTR. Sid. CrossMax. Lockout. Tubeless. The RXC Team just may be the lightest, fastest, most comfortable, energy-efficient, and technologically advanced cross-country production bike the world has ever seen. Weighing in at just 20.1 lbs (17.5"), utilizing Felt proprietary Easton Scandium tubing & Carbon Fiber seatstays, the RXC Team is assembled with some of the finest components known to mankind.

Frame / Fork	Felt Proprietary Superlight Easton Scandium Tubing / Felt Exclusive Carbon Fiber Seatstays, Cold Forged Dropouts, Replaceable Derailleur Hanger, Fully-Integrated Head Tube. RockShox SID Team with PopLoc Remote Lockout, 80mm Travel.
Group	Complete Shimano XTR, Including V-Brakes & Chain.
Wheelset	Mavic CrossMax SL Tubeless; Continental Twister Tubeless Tires 26 x 1.9
Components	Carbon Re-inforced Handlebar, Stem and Seatpost; Carbon Shell Saddle w/ Superlite Foam and CrN/Ti Rails.

RXC PRO

Sizes	15.5, 17.5, 19.5, 21.5"
Weight	22.2 lbs (17.5")
Finish	Red

Simply put, the RXC Pro is the *attainable* sibling to the RXC Team. Designed for equally serious cross-country and X-Terra racers, the RXC Pro features a Felt superlite 7000 series Aluminum / Carbon frameset, a superlight Manitou Skareb Comp fork w/lockout, Mavic Rims, and a complete XT group--pumped up with an XTR rear derailleur. Coming in at a very respectable 22.2 lbs and a surprisingly affordable price, the RXC Pro can't be beat in overall spec value.

Frame / Fork	Felt proprietary Superlight 7000 Series Aluminum Tubing / Felt Exclusive Carbon Fiber Seatstays, Cold Forged Dropouts, Replaceable Derailleur Hanger, Semi-Integrated Head Tube. Answer/Manitou Skareb Comp, TPC Damping/Lockout, 80mm Travel.
Group	XTR Shimano Rear Derailleur; w/complete 2005 XT Throughout: Hollowtech II Cranks, Dual Control Levers, Front Derailleur, V-Brakes, Hubs, Cassette.
Wheelset	Mavic XC717 SUP 32H Rims; Shimano XT Hubs, 15G Black Stainless Spokes, Continental Twister Tires w/Supersonic Casing & Folding Kevlar Bead 26 x 1.9
Components	2014 Butted Aluminum Handlebar, 4-Bolt Cold-Forged Aluminum Stem, 2-Bolt Aluminum Seatpost, Felt Form Race Saddle w/Superlite Foam, Kevlar Corners & Cr-Mo Rails.

RXC

Sizes	15.5, 17.5, 19.5, 21.5"
Weight	26.8 lbs (17.5")
Finish	Semi Matte Black

You may be just getting started in cross-country or X-Terra racing, and you're looking for a bike that is built upon a rock-solid design platform. Anyone will tell you that frame is the heart and soul of any bike, so it's gotta be spot-on. By using the exact same superlight Aluminum/Carbon 1375 gram frameset as the more-expensive RXC Pro, the RXC has you covered. It's built up with a XT/LX/Deore 27-speed component mix, and features a high-performance Manitou Axle Elite fork w/lockout. After sizing up the competition, you'll find the RXC is peerless.

Frame / Fork	Felt proprietary Superlight 7000 Series Aluminum Tubing / Felt Exclusive Carbon Fiber Seatstays, Cold Forged Dropouts, Replaceable Derailleur Hanger, Semi-Integrated Head Tube. Answer/Manitou Axle Elite, TPC Damping/Lockout, 80mm Travel.
Group	Shimano XT Rear Derailleur, LX Front Derailleur, Deore Rapid Fire Shift/Brake Levers, Deore Cassette & Hub, Hollowtech Cranks, V-Brakes.
Wheelset	Alex Doublewall 32H Rims w/Machined Sides, Shimano Deore Rear/Felt Front Hubs, 15G Black Stainless Spokes, Tioga Blue Dragon 26 x 2.1 Front / Red Phoenix 1.9 Rear Folding Kevlar Bead.
Components	Butted 6061 Aluminum Handlebar, 4-Bolt Cold-Forged Aluminum Stem, Aluminum Micro-Adjust Seatpost, Felt Form Sport Saddle w/Tough Corners.

1 MENS BLACK T

- Tailored Fit
- 100% Cotton
- S, M, L, XL, XXL

2 MENS RED T

- Tailored Fit
- 100% Cotton
- S, M, L, XL, XXL

3 LONG-SLEEVE T-SHIRT

- 100% Cotton
- Black Only
- M, L, XL, XXL

4 HOODY

- 100% Cotton
- Black Only
- L, XL, XXL

5 WOMENS BABY RIB LONG SLEEVE T

- 100% Cotton
- Black Only
- S/M, L/XL

6 WOMENS BABY RIB T

- 100% Cotton
- Aqua Only
- S/M, L/XL

7 FLEX-FIT BALL CAP

- Black Only
- M/L, L/XL

8 BEANIE

- Black Only
- one size fits all

9 COOL MESH VISOR

- Cool Max Sweatband
- Black Only
- one size fits all

10 FELT JERSEY

- Aries Micro Plus Fabric
- Hidden Zipper
- Made by Voler
- S, M, L, XL

11 FELT SHORTS

- 8.0z. Lycra/Nylon Blend Fabric
- Cantara perforated synthetic chamois
- Made by Voler
- S, M, L, XL

12 FELT SOCK

- CoolMax/Nylon Blend Fabric
- Made by DeFeet
- S, M, L

13 WATER BOTTLES

- 22 oz. and 28 oz.

BRIAN WILSON

MODEL	RXC	RXC PRO	RXC TEAM
COLORS	Matte Black	Red	Matte Black
SIZES	15.5, 17.5, 19.5, 21.5"	15.5, 17.5, 19.5, 21.5"	15.5, 17.5, 19.5, 21.5"
FRAME	Felt Superlight XC Series 6061 Double-Butted Aluminum, with Monostat Design Carbon Fiber Seat Stays, Oversized Semi-Integrated Head Tube, Replacable Derailleur Hanger, V-Brake Specific	Felt Superlight XC Series 6061 Double-Butted Aluminum, with Monostat Design Carbon Fiber Seat Stays, Oversized Semi-Integrated Head Tube, Replacable Derailleur Hanger, V-Brake Specific	Felt Superlight XC Series Easton Scandium, with Monostat Design Carbon Fiber Seat Stays, Cane Creek Type Integrated Head Tube, Replacable Derailleur Hanger, V-Brake Specific
FORK	Manitou Axel Elite with TPC Lockout, Magnesium Lowers, Aluminum Crown, Cr-Mo Steer Tube, 28.6mm Cr-Mo Stancions, SVS Damping / Lockout, 80mm Travel, 4.2 lbs	Manitou Skareb Comp with TPC Lockout, 1-1/8" Steel Steer Tube, 28.6mm Aluminum Stanchions, One-Piece Magnesium Lowers, Air Spring, 80mm Travel, with External Rebound Adjust, Mini Boots, 3.5 lbs	RockShox SID Team with PopLoc Remote, 1-1/8" Butted Aluminum Steer Tube, Easton Taperwall 28mm Aluminum Stanchions, One-Piece Magnesium Lowers, Dual Air Spring, 80mm Travel, with Remote PopLoc Damping Adjust/Lockout, 3.2 lbs
HEADSET	Semi-Integrated 1-1/8" Aheadset, with Alloy Laser Top Cap, Curved 1 x 15mm + 2 x 5mm Straight Washers	Semi-Integrated 1-1/8" Aheadset, with Alloy Laser Top Cap, Curved 1 x 15mm + 2 x 5mm Straight Washers	Fully-Integrated 1-1/8" Aheadset--Cane Creek Type Sealed Cartridge Bearing, with Alloy Laser Top Cap, Custom 1 x 15mm + 2 x 5mm Straight Washers
STEM	Felt Cold-Forged 6061 Aluminum, 4-Bolt Design, 1-1/8" Threadless, 5 Degree Rise.	Felt Cold-Forged 6061 Aluminum, 4-Bolt Design, 1-1/8" Threadless, 5 Degree Rise.	Felt Cold-Forged Carbon-Reinforced 2014 Aluminum, 4-Bolt Design, 1-1/8" Threadless 5 Degree Rise.
HANDLEBAR	Felt Butted 6061 Aluminum, Flatbar, 6 degree Bend. 170 Grams.	Felt Butted 2014 Aluminum, Flatbar, 6 degree Bend. 150 Grams.	Felt Carbon-Reinforced Butted 7075 Aluminum, Flatbar, 6 degree Bend. 135 Grams.
GRIPS	Felt Single-Density 130mm Length, 30mm OD, with Felt End Plugs	Felt Single-Density 130mm Length, 30mm OD, with Felt End Plugs	Felt Single-Density 130mm Length, 30mm OD, with Felt End Plugs
SHIFTERS	Shimano Rapidfire Deore, 27 Speed	Shimano Deore XT Dual Control 27-Speed	Shimano XTR Dual Control, 27-Speed
FRONT DERAILLEUR	*Sram X-Gen or Shimano LX	Shimano Deore XT	Shimano XTR
REAR DERAILLEUR	Shimano Deore XT SGS	Shimano XTR SGS	Shimano XTR SGS
CRANKSET	Shimano M445 Hollowtech Octalink 44/32/22T w/Chainguard	Shimano Deore XT Hollowtech II 44/34/24T	Shimano XTR Hollowtech II 44/32/22T
BB SET	Shimano ES30 Cartridge, Octalink Hollow Axle	Hallowtech II Integrated with Crankset	Hallowtech II Integrated with Crankset
FREEWHEEL	Shimano HG-50-9, 9-Speed Cassette, 11-32T	Shimano XT, 9-Speed Cassette, 11-34T	Shimano XTR, 9-Speed Cassette, 11-34T
CHAIN	KMC Z9000	KMC Z9000	Shimano CN-7701
BRAKE LEVERS	Shimano Deore V- Brake	Shimano Deore XT Dual Control	Shimano XTR Dual Control
BRAKES	Shimano BR-M450 V- Brake	Shimano Deore XT V-Brakes	Shimano XTR V-Brake
CABLES	Amber-Gray Weave Casing, with Felt Rubber Tube Tops	Amber-Gray Weave Casing, with Felt Rubber Tube Tops	Shimano XTR
SADDLE	Felt "Form" 5-Piece Stitched Cover with Tough Corners, Satin Steel Rails	Felt "Form" Super-Lightweight Foam, 5-Piece Stitched Cover with Kevlar Corners, Silver Tubular Cr-Mo Rails	Felt "Form" Ultra-Light, Carbon Base, Super-Lightweight Foam, 3-Piece Stitched Cover, CrN/Ti Rails
SEAT POST	Alloy Micro-Adjust, Low-Profile 27.2mm x 350mm	Two-Bolt Alloy Micro-Adjust, 27.2mm x 350mm	Carbon-Reinforced 2014 Alloy Micro-Adjust, 27.2mm x 350mm
SEAT POST CLAMP	Bolt-Type, Cold Forged 6061 Aluminum, with Steel Barrel Nut & Slant Rear Cut Design, 30.6mm	Bolt-Type, Cold Forged 6061 Aluminum, with Steel Barrel Nut & Slant Rear Cut Design, 30.6mm	Bolt-Type, Cold Forged 6061 Aluminum, with Steel Barrel Nut & Slant Rear Cut Design, 30.6mm
F/HUB	Felt Cold-Forged Aluminum Body 32H, with Alloy Quick Release	Shimano Deore XT, 32H	Mavic CrossMax SL Tubeless Wheelset
R/HUB	Shimano Deore, 9-Speed Cassette, 32H	Shimano Deore XT, 9-Speed Cassette, 32H	Mavic CrossMax SL Tubeless Wheelset
RIMS	Alex ACE-18 Doublewall, 26 x 1.5 x 32H, Black Anodized with CNC Machined Silver Sidewalls	Mavic XC 717, 26 x 1.5 x 32H, Single Eyelets, SUP, UB Control, Maxtal	Mavic CrossMax SL Tubeless Wheelset
TIRE	Tioga Blue Dragon Front & Rear, 26 x 2.1, 66TPI, Kevlar Bead, Superlight Inner Tubes	Continental Twister Front & Rear; 26 x 1.9, Supersonic Casing, 66TPI, Kevlar Bead, Superlight Inner Tubes	Continental Twister Front & Rear; 26 x 1.9, UST Casing, 700 grams, Kevlar Bead, Tubeless
SPOKES	15G Stainless with Brass Nipples, Matte Black Finish, Radial Lace Front, 3-Cross Rear	15G Stainless with Black Alloy Nipples, Matte Black Finish, Radial Lace Front, 3-Cross Rear	Wheelset
PEDALS	MTB Low-Profile Lightweight Design, Alloy Cage / Alloy Body, 255g	none	none
WEIGHT	26.8 lbs (17.5")	22.2 lbs (17.5")	20.1 lbs (17.5")

*subject to component availability. specs subject to change without notice.

CONCEPT / DESIGN CRITERIA

XC & X-Terra Specific
Ultra-Light
Efficient & Responsive
Comfortable & Compliant
Ultimate in Design Refinement

FRAME WEIGHTS

RXC Team: 1300 grams (2.86 lbs)
RXC Pro & RXC: 1375 grams (3.0 lbs)

TUBING SPECS

TOP TUBE—Bi-Ovalized to allow maximum width at head tube for increased stiffness and a reduced diameter at seat tube for optimized interface with seat tube.

DOWN TUBE—Externally and internally butted at the BB shell to provide maximum pedaling efficiency. Reduced diameter at head tube for optimized interface with head tube. The addition of a gusset increases strength and provides fork clearance for integrated headsets.

SEAT TUBE—Seat tube swages from 34.9mm at BB to 30.6mm, to provide stiff and efficient pedaling, yet utilizes a smaller diameter, light-weight compliant 27.2mm seatpost.

CARBON FIBER SEATSTAY / MONOSTAY—Provides the ultimate in light-weight and compliance for XC use. The carbon monostay blends seam-lessly into the aluminum front triangle by utilizing an internal carbon fiber bonding sleeve. Carbon Fiber allows the use of complex shapes. External bulges on seatstays provide maximum brake stiffness without the harsh feel associated with traditional oversized stays.

CHAINSTAYS–Smaller diameter stays swage from 25.4mm to 16mm for sleek appearance and added compliance. The forming from oval to round provides a clean interface with the dropout.

DROPOUTS—Minimal, clean, lightweight dropout with replaceable derail-leur hanger.

HEADTUBE— Oversized hourglass shape for fully integrated (RXC Team) and Semi-Integrated Headsets (RXC Pro and RXC).

BB SHELL—Internally relieved on all frames.

GEOMETRY

RXC / PRO

SIZE	15.5	17.5	19.5	21.5
A.HA	71.0	71.0	71.0	71.0
B.SA	74.5	73.0	73.0	72.5
C.TTL (HORIZONTAL)	560	590	620	635
D.TTL (C TO C)	546.3	564.7	594.3	611.3
E.HEAD TUBE LENGTH	120	120	130	150
F.ST LENGTH (C TO T)	394	445	495	546
G.ST LENGTH (C TO C)	333.1	386	435.8	486.8
H.BB DROP	40	40	40	40
I.CHAINSTAY LENGTH	426	422	422	422
J.FRONT CENTER	625	640	670	680
K.WHEEL BASE	1048	1058	1089	1099
L.FORK RAKE	39	39	39	39
M.STANDOVER	701	731	766	804
H-BAR	580	580	600	600
SEATPOST SIZE	27.2	27.2	27.2	27.2
CRANK LENGTH	170	175	175	175
STEM	100	110	120	130
FORK TRAVEL	80	80	80	80

RXC TEAM

SIZE	15.5	17.5	19.5	21.5
A.HA	71.0	71.0	71.0	71.0
B.SA	74.5	73.0	73.0	72.5
C.TTL (HORIZONTAL)	560	590	620	635
D.TTL (C TO C)	546.3	564.3	596.1	614.4
E.HEAD TUBE LENGTH	120	120	130	150
F.ST LENGTH (C TO T)	394	445	495	546
G.ST LENGTH (C TO C)	333.1	386.2	437.4	489.3
H.BB DROP	40	40	40	40
I.CHAINSTAY LENGTH	426	422	422	422
J.FRONT CENTER	624	639	669	679
K.WHEEL BASE	1047	1058	1088	1089
L.FORK RAKE	39	39	39	39
M.STANDOVER	701	731	766	804
H-BAR	580	580	600	600
SEATPOST SIZE	27.2	27.2	27.2	27.2
CRANK LENGTH	172	175	177	177
STEM	100	110	120	130
FORK TRAVEL	63	63	63	63

A = Head Tube Angle
B = Seat Tube Angle
C = Top Tube Length (Horiz.)
D = Top Tube Length (C - C)
E = Head Tube Length
F = Seat Tube Length (C - T)
G = Seat Tube Length (C - C)
H = BB Drop
I = Chain Stay Length
J = Front Center
K = Wheel Base
L = Fork Rake
M = Stand Over

(Horiz.) = Horizontal
(C - C) = Center to Center
(C - T) = Center to Top

2005 FELT MTB GEOMETRY CHART

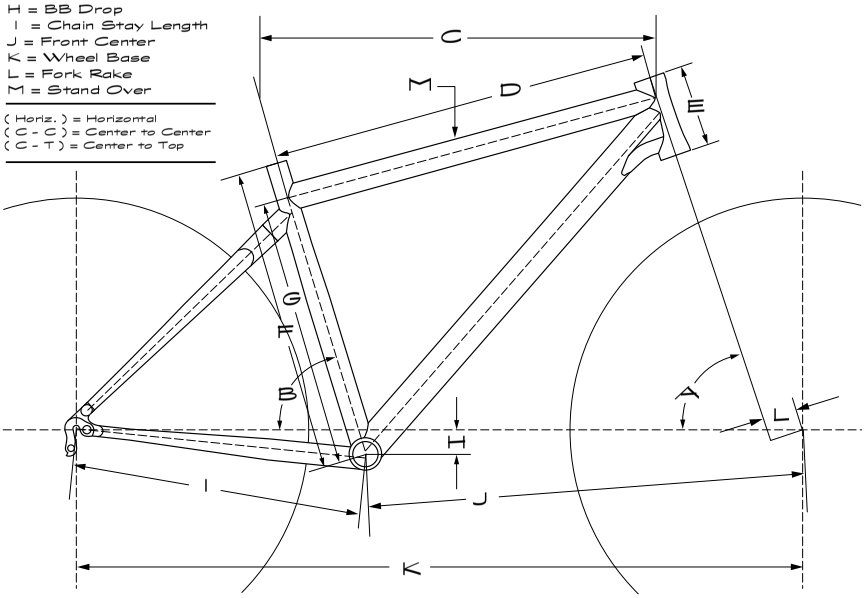

© MMIV Felt Racing, LLC

Felt strongly recommends that all riders use helmets. The action depicted in this catalog is dangerous. The riders seen in our photos are experienced.