FELT BICYCLES
12 Chrysler
Irvine , California
92618
www.feltbicycles.com
:007
F2 SGT

At Felt, there are four key challenges we impose on ourselves every day as we design and develop our bicycles:

FIRST : To never be satisfied. We are driven to constantly push every model and every design. This can translate to reduced weight, higher performance, additional features, enhanced comfort, better looks, greater dollar value, or most likely, a combination of all these attributes.

SECOND : To see beyond the limits of technology. We are constantly looking forward, getting a sense of what is beyond the current known technological limitations. Whether it's new materials, new tube forming processes or revolutionary design concepts, Felt is always looking beyond the scope of our imagination.

THIRD : To maximize performance, ride quality, aesthetics, and attention to detail. At Felt, we emphasize ride quality as much as we do efficiency, and that is why our engineers scrutinize the smallest of details. Every tube, wall-thickness, butting placement, taper and flare was specifically designed to give a lively, reactive, comfortable, all-day-long ride without sacrificing any measure of efficiency.

FOURTH : To exceed rider's expectations by providing a sense of individuality, inspiration and pride in ownership. At Felt, we recognize that if you try to be all things to everyone, you usually end up being nothing to no one. We know there are riders who are searching for that one bicycle that reflects their individual personality, their style and their personal standards for quality and excellence. And more importantly, a bike that inspires them to get out and ride. Every decision we make goes toward producing a bicycle that delivers pride in ownership.

These four key goals help us to achieve our mission:

"TO DESIGN, DEVELOP, AND DELIVER THE BEST BICYCLES IN THE WORLD. PERIOD."

2007 undoubtedly marks the most exciting and significant model year in our company's history. In the spirit of our mission, and in a way almost impossible to predict, it is this year in which several of our most anticipated, most labor intensive, long-term design projects have reached fruition simultaneously. 2007 brings with it not only unprecedented excellence, but delivers it on multiple fronts.

It is this year in which Felt sets a new benchmark in the world of Triathlon with the all-new wind-tunnel developed and proven, aerodynamically-peerless carbon DA frameset system; a feat in itself. It is this year in which we deliver the cutting-edge and forward-thinking Z series compact road racing frame, offering a more relaxed geometry and body position, coupled with amazing stiffness and an aggressive demeanor. It is this year in which we present our exciting FW (Fit Woman) line of road racing models, developed by women for women. And it is also this year in which we launch full-scale into the Mountain Bike arena, paving the way with our revolutionary and patented Equilink technology; our full suspension platform setting a new standard with unrivaled speed and efficiency.

Without question, 2007 has come together in a truly remarkable way. Whether it's Road, Triathlon, MTB, Cyclocross or Track racing, this year Felt delivers the most technologically advanced bicycles in history.

T.O.C.

04/05	Felt Carbon : Theory / Overview
06/07	Felt Carbon :Methodology
08/09	Felt Alloy : Theory
10/11	F Series : Intro / Tech
12/13	F1 / F2
14/15	F3 / F4
16/17	F55 / F75
18/19	F85 / F24
20/21	Z Series : Intro
22/23	Z Series : Tech
24/25	Z25 / Z35
26/27	Z65 / Z70
28/29	Z80 / Z90
30/31	FW Series : Intro / Tech
32/33	FW2
34/35	FW3 / FW4
36/37	Tri Series : Intro
38/39	DA : Frame Intro / Tech
40/41	DA
42/43	B2 / S22
44/45	S32 / T43
46/47	Track : Intro / TK2
48/49	Cyclo-X : Intro / F1X
50/51	Frames : F1 / Z1 / TK2 / CA1
52/53	Frames : DA / B2
54/57	Road Specifications
58/61	Road Geometry Charts
62/63	Equilink Suspension : Intro
64/67	Equilink Suspension : Tech
68/71	Virtue Series : Intro / Tech
72/73	Virtue One
74/75	Virtue Two
76/77	Virtue Three / Virtue Four
78/79	RXC Series : Intro / Tech
80/81	RXC Pro / RXC Elite
82/83	Q Series : Intro / Tech
84/85	Q920
86/87	Q720 / Q620
88/89	Shot Series : Intro / Tech
90/91	Jump Shot
92/93	Straight Shot / Double Shot
94/95	Frames : RXC Team / Jump Shot / Virtue R & AM
96/97	Mountain Specifications
98/99	Mountain Geometry Charts
100/101	Apparel / Clothing
102/103	Pro Pages

FELT CARBON THEORY

Three years ago, when Felt set out to design its first full carbon frame, the F1C, we knew we had no choice but to utilize the absolute best tools available. As with all design projects we take on, we first looked at what we wanted the end product to be, and what would be required to make it absolutely perfect. Then we sourced and developed the finest materials and processes to meet those needs. The result was performance beyond our expectations.

Fast forward to the present: Felt remains at the forefront of carbon technology, continuously refining our F series road racing models while introducing the material into several all-new frameset platforms. Further still, in situations where we simply cannot find just the right carbon fiber bicycle component, we venture out and develop the parts ourselves.

Final assembly of our UHC carbon fiber into the new DA mold.

07 CARBON FIBER PRODUCT OVERVIEW

F Series Frames

After years of cumulative feedback from our race team and support riders worldwide, countless hours of laboratory testing, as well as new developments in carbon technology, we have been able to do something truly remarkable; take our F series carbon frames to the next level. By utilizing a newly refined blending of carbon fiber we call UHC (Ultra Hybrid Carbon), for 2007 we have shed significant weight from the F1C while further increasing its stiffness and efficiency.

New Frameset Platforms

For 2007 Felt has launched several all-new frame designs into the carbon fiber program:

***DA** - The wind-tunnel developed and proven, aerodynamically-peerless DA frame system for triathlon. Not just a frame, but a totally integrated frame, fork, and stem "system" to become the most aerodynamically advanced triathlon bike the world has ever seen.

***Z Series** - This compact road racing frame offers relaxed geometry and a more upright body positioning while utilizing exaggerated, sculpted tube shapes for enhanced stiffness and plenty of attitude.

***Virtue Series** - The carbon fiber rear sub-frame utilized on our Virtue full suspension models [featuring Equilink technology] not only dampens terrain input, but is also utilized for its inherent spring-like qualities, eliminating a dropout pivot and becoming a integral, active member of the suspension system.

Components

When it comes to bicycle components, we develop only those we know we can and must improve upon. For example, when the best road racing fork from supplier "A" was incredibly light but far too flexy, and the best fork from supplier "B" was perfectly stiff yet sadly heavy, we took it upon ourselves to develop our own; one possessing the specific requirements we demanded. Our 2007 Felt road racing fork turned out to be both lighter and stiffer than any other option available on the market. Another example is road racing handlebars. While some brands use inexpensive carbon models made of three-piece bonded/overlapped construction (to facilitate production of multiple widths) Felt chose to open up our own one-piece molds, resulting in a lighter, and stronger handlebar. These are just two examples of how, when it comes to outfitting our bicycles with the best components possible, Felt gets the job done one way or another.

Testing of our new Felt 1.1 UHC carbon bar.

Stiffness testing of our new Felt Bayonet fork.

Fatigue testing of our new Felt 1.2 road forks.

FELT CARBON FIBER MANUFACTURING METHODOLOGY

Many factors influence the making of a great frame, fork, or component. Design details, construction methods, and materials are the primary three.

Design Details

Carbon Fiber is an engineers dream come true: A material that is lighter than aluminum and is pound for pound stronger than steel. It can be molded into complex shapes and sizes, as well as having the ability to be "laid-up" with more material where you need it, and less where you don't. By utilizing this material, we are able to take our wall specifications and tube shapes to the next level. Some of these details include oversized diameters, unique shapes, and exaggerated tapers. Every frame implements size-specific details. For example: the tube diameters of a 50cm frame are noticeably smaller than the tubes on a 60cm frame; even radii and tube transitions change to support areas of the frame differently. All of this adds up to a frame that is stiff and responsive, yet has excellent damping characteristics and vibration control, specific to the needs of a given size rider.

Construction

All Felt carbon frames are created using our Modular Monocoque Method - the second major factor contributing to a frame's performance. This is a process in which the front triangle, seat stays, and chainstays are molded as individual sections. This allows us to completely optimize each frame section toward a specific requirement; be it torsional stiffness for the front triangle, or vertical compliance in the seat stays. Each of these frame sections is made of multiple layers of carbon. The number of layers is not constant along the entire part: in areas where the load on the frame is high, more layers are used; and in low stress areas, fewer layers are used to save weight. After these individual sections are created, they are fused together into a seamless monocoque (one-piece) structure. Since carbon fibers work best in tension, when assembling the carbon parts we carefully position the unidirectional carbon cloth so that the fibers are oriented in the direction of greatest stress. Unidirectional carbon fiber has the highest tensile strength, and is used for the structure of the frame. The Modular Monocoque construction method is superior to other processes due to the unified design which ensures perfect alignment, no excess material, no need for putty or filler in the finishing process, and no stress concentration; all while delivering minimal weight, amazing responsiveness, and incredible overall strength.

Materials

All carbon fiber material is not created equal. Simply looking at the properties of a single material is no way to judge a frame's quality. The carbon weave, or outer appearance, which most people recognize is typically used only for the final outermost layer, which is visible through the clear coat. Although this lends some structural integrity to the frame, it is primarily cosmetic. So a 2K, 3K, or 12K weave designation does not necessarily determine a frame's quality.

Carbon Fiber can be ranked in two ways: one being the Modulus, which dictates the fiber's relative stiffness; and the other being Tensile Strength, or how strong or tough the material is. Building a frame of just the highest modulus material would be a disaster, as the ride quality would suffer from being too stiff, as well as the overall strength being compromised. The key is to blend different materials with unique properties, placing them in specifically targeted areas of the frame. In doing so, we can tailor our frames to possess just the right combination of stiffness, strength, and compliance while achieving a desired weight.

All of Felt's carbon frames use only the highest quality, premium name brand carbon materials, and it is how we blend these different types of material which is the third major factor in optimizing our frames. Here is a look at the three different carbon materials and blends Felt employs throughout our bicycle lineup:

***High Modulus :** The carbon fiber in our High-Modulus frame material is a 700ksi fiber blend, and has a tensile strength 7.9 times greater than 3/2.5 Titanium, and stiffness 3.34 times greater than 6061 Aluminum.

***Ultra-High Modulus :** The carbon fiber used in our Ultra-High Modulus frame material are 800ksi and 700ksi fibers and are 27% stiffer than material used in our High Modulus frames. Ultra-High Modulus material has a lower capacity for retaining resin, which results in a frame roughly 20% lighter, yet with virtually identical stiffness and strength.

***Ultra Hybrid Carbon (UHC) :** For frames utilizing our Ultra Hybrid Carbon, we source materials from several of the world's leading carbon fiber manufacturers. We select the optimal blend of three different fiber types including fibers with tensile moduli as high as 588GPa and strategically locate them based on their unique attributes; using the toughest carbon fiber in a given area and the stiffest carbon fiber in another, delivering a chassis with unmatched compliance, lightweight, strength, performance and handling.

When it comes to our carbon fiber manufacturing methodology, it goes without saying that an incredible amount of design, testing, experience, and cost goes into the development of each Felt frames and component. The result is a frame free of compromise and full of performance; providing you with the ultimate ride, and the ultimate advantage.

Protective 3K weave laid into a DA mold.

Fatigue testing of F Series carbon frame.

FELT ALLOY THEORY

With the ability to be cold-worked, butted, and formed into complex shapes, aluminum alloys have proven themselves, time and time again, to possess excellent characteristics for lightweight bicycle frame construction.

Custom tubing shapes, when expertly designed can offer far more than just great looks. Ride quality is, of course, one of the most important features to build into the design of a performance bicycle. Internal and external butting, in addition to reducing weight, distributes stress away from the weld zones, while custom tapering, flaring, and bi-ovalizing tubes can substantially increase stiffness in areas where it is most needed. These properties combined can enhance handling, comfort and acceleration.

At Felt, we use the most advanced types of forming technologies, including state-of-the-art Hydroforming. Using high pressure liquid to form tubing from the inside out, hydroforming allows for unusual and complex external shapes while being able to utilizing premium double-butted tubing internally. This results in lightweight yet remarkably strong tubing, without requiring gusseting or reinforcement. Additionally, we can directionally-tune the tubing to offer a set of desired ride characteristics.

Whether using this latest technology or traditional methods, at Felt every tube diameter, wall thickness, butting and shapes are fine-tuned to bring together a balance of high performance, superlight weight and comfort.

SUPERLITE TUBING

Our Superlite 7005 and 6061 aluminum frame tubes utilize secondary butting to save additional weight and further tune the ride. Additionally, our Superlite frames feature forged and CNC machined head tubes, BB shells and dropouts to further eliminate unwanted weight. When combined with carbon seat stays, we can build a frame that can enhance comfort and minimizing rider fatigue while still retaining the lively and responsive feel of aluminum.

Jamie Whitmore racing the RXC Team.

KINESIUM TUBING

This material sets an even higher standard in strength for 7000 series alloys. Kinesium is a proprietary alloy that offers higher fatigue resistance, translating into thinner-wall tubes building a lighter frame without sacrificing strength and stiffness.

F-LITE TUBING

F-Lite' is Felt's answer to the absolute best in affordable high-performance tubing. 7005 is an aluminum alloy that uses a zinc base to enhance its strength. This allows us to reduce the wall thickness of the tubes considerably. All of our 7005 frame tubes are custom-shaped and butted to Felt specifications, which maximize strength, minimize weight and deliver optimal ride quality.

FELT F SERIES

THE F SERIES: DESIGNED WITH ONE THING IN MIND: RACING. PURE AND SIMPLE.

Since the day Felt was founded, racing has been our pursuit and our passion, and nothing reflects our love of the sport more than the line of F series road racing machines. For 2007, we have taken our years of experience, collective input from top riders and professional athletes, and feedback from our worldwide dealer network to take this bicycle lineup to the next level.

F series frames feature quick and aggressive semi-compact race geometry, and unparalleled stiffness and power transfer. Whether it's full carbon or a carbon/aluminum blend, every frameset within the F series delivers explosive speed. What may be more amazing is the ride quality built into each of our frames. At Felt, we emphasize ride quality as much as we do efficiency, and that is why our engineers scrutinize the smallest of details. Every tube, wall-thickness, butting placement, taper and flare was carefully engineered to provide a lively, reactive, comfortable ride without sacrificing any measure of performance.

Beyond the frame, F series models are built up with components specifically chosen with nothing but road racing in mind. Under race conditions, just being lightweight will never suffice; components must be predictable and absolutely dependable. For example, every model within the F series models is equipped with a Shimano 20-Speed drivetrain, so you know that, from the cranks to the cogs, you will never miss that critical shift. Our product team spends countless hours researching their component choices to ensure that no corners are cut, and that every F series specification is gimmick-free, packed with performance, and fast as hell.

Built up from the lightest, stiffest, carbon and carbon/superlite aluminum framesets we've ever produced, the 2007 F series were designed to be the fastest road racing bikes on the planet.

THE 2007 F SERIES: FAST. LIGHT. SMOOTH.

UCI Team Konica-Minolta

F SERIES TECHNICAL DESIGN FEATURES

Modular Monocoque Construction

Semi-Compact Frame Geometry

F1

SIZES (cm) : 50 / 52 / 54 / 56 / 58 / 60

COLOR : Semi-Matte Black

WEIGHT : 14.9 lbs.

FEATURES OVER F2 :

UHC Ultra-Hybrid Carbon, Modular Monocoque carbon frame, Felt 1.1, UHC Ultra-Hybrid Carbon, Modular Monocoque fork with carbon dropouts, Ritchey WCS stem, Felt 1.1 Superlite carbon handlebar, Dura-Ace cassette and chain, Sella Italia SLR leather cover saddle w/Ti rails and Ritchey, WCS carbon seatpost, Mavic Cosmic Carbone SL Premium wheelset

FRAME :

New Felt Custom-Designed Modular Monocoque Frame, with UHC (Ultra Hybrid Carbon)

FORK :

New Felt Custom-Designed Monocoque 1.1 Fork, with UHC (Ultra Hybrid Carbon) and Carbon Dropouts

DRIVETRAIN :

Dura-Ace 20-Speed Group 53/39T Chainrings

WHEELSET :

Mavic Cosmic Carbon SL Premium Wheelset, Vittoria Diamante Pro-Light Tires

COMPONENTS :

Felt 1.1 Full Carbon Handlebar, Ritchey WCS Carbon Seatpost and Stem, Sella Italia SLR Saddle with Titanium Rails

F2

SIZES (cm) : 50 / 52 / 54 / 56 / 58 / 60

COLOR : Gloss Clear over Carbon

WEIGHT : 15.7 lbs.

FEATURES OVER F3 :

Shimano Dura-Ace crankset and BB, Shimano Dura-Ace brakes, Shimano Dura-Ace WH-7801SL wheelset w/Vittoria Diamante Pro-Light tires

FRAME :

Felt Custom-Designed Modular Monocoque Frame, with Ultra-High Modulus Carbon Fiber

FORK :

New Felt Custom-Designed Monocoque 1.2 Fork, with Ultra-High Modulus Carbon Fiber

DRIVETRAIN :

Shimano Dura-Ace 20-Speed Group 53/39T Chainrings with Shimano cassette and chain

WHEELSET :

Shimano Dura-Ace WH-7801SL Wheelset, Vittoria Diamante Pro-Light Tires

COMPONENTS :

Felt 1.2 Carbon/6061 Alloy Butted Composite Bar, Felt 1.1 3D-Forged Stem, Felt 1.1 Leather Saddle with Carbon Injected Base, Felt 1.1 Carbon Monocoque Seatpost, Shimano Dura Ace Brakeset

F3

SIZES (cm) : 50 / 52 / 54 / 56 / 58 / 60

COLOR : Gloss Clear over Carbon

WEIGHT : 17.0 lbs.

FEATURES OVER F4 :

Ultra-High Modulus, Modular Monocoque carbon frame, Felt 1.2 Ultra-High Modulus Carbon Monocoque fork, Felt 1.1 3D forged stem, Felt 1.2 carbon/6061 butted handlebar, Shimano Dura-Ace dual control levers and front derailleur, Mavic Ksyrium Equipe wheelset

FRAME :

Felt Custom-Designed Modular Monocoque Frame, with Ultra-High Modulus Carbon Fiber

FORK :

New Felt Custom-Designed Monocoque 1.2 Fork, with Ultra-High Modulus Carbon Fiber

DRIVETRAIN :

Shimano Dura-Ace 20-speed shifters and derailleur's, Shimano Ultegra Crankset with 53/39T Chainrings, Shimano cassette and Chain

WHEELSET :

Mavic Ksyrium Equipe Wheelset, Vittoria Rubino Pro Slick Tires

COMPONENTS :

Felt 1.2 Carbon/6061 Alloy Butted Composite Bar, Felt 1.1 3D-Forged Stem, Felt 1.1 Leather Saddle with Carbon Injected Base, Felt 1.1 Carbon Monocoque Seatpost, Shimano Ultegra SLR Brakeset

F4

SIZES (cm) : 50 / 52 / 54 / 56 / 58 / 60

COLOR : Gloss Clear over Carbon with Gloss Black Fade

WEIGHT : 17.5 lbs.

FRAME :

Felt Custom-Designed Modular Monocoque Frame, with High Modulus Carbon Fiber

FORK :

New Felt Custom-Designed High Modulus Carbon Fiber 1.3 Fork with Carbon Steerer

DRIVETRAIN :

Shimano Dura-Ace Rear Derailleur /Ultegra 20-speed shifters and Front Derailleur, Shimano Ultegra Crankset with 53/39T Chainrings, Shimano cassette and chain

WHEELSET :

Shimano WHR-561 Wheelset, Vittoria Rubino Pro Slick Tires

COMPONENTS :

Felt 1.3 6061 Butted Alloy Bar, Felt 1.2 3D-Forged Stem, Felt 1.1 Saddle with Carbon Injected Base, Felt 1.1 Carbon Monocoque Design Seatpost, Shimano SLR Brakeset

F55

SIZES (cm) : 50 / 52 / 54 / 56 / 58 / 60 / 63

COLOR : Semi-Matte Black

WEIGHT : 18.0 lbs.

FEATURES OVER F75 :

Felt 1.3 butted alloy handlebar, Shimano Dura-Ace dual control levers and derailleurs, Shimano 2/pc Ultegra crankset and BB, Shimano SLR dual pivot brakes, Felt 1.1 leather racing saddle, Felt 1.1 Monocoque carbon seatpost, Mavic Aksium wheelset w/Vittoria Rubino Pro Slick tires

FRAME :

Felt Exclusive 7005 Superlite custom-butted aluminum frame with carbon fiber wishbone seatstays. Externally relieved integrated head tube, machined bottom bracket, forged dropouts with replaceable hanger and internal brake cable routing

FORK :

Felt Custom-Designed High Modulus Carbon Fiber 1.3 Fork with Carbon Steerer

DRIVETRAIN :

Shimano Dura-Ace 20-speed shifters and derailleurs, Shimano Ultegra Crankset with 53/39T Chainrings, Shimano cassette and Chain

WHEELSET :

Mavic Aksium wheelset, Vittoria Rubino Pro Slick Tires

COMPONENTS :

Felt 1.3 6061 Double Butted Alloy Bar, Felt 1.2 3D-Forged Stem, Felt 1.1 Saddle with Carbon Injected Base, Felt 1.2 Carbon Seatpost, Shimano SLR Brakeset

F75

SIZES (cm) : 50 / 52 / 54 / 56 / 58 / 60 / 63

COLOR : Semi-Matte Black

WEIGHT : 18.4 lbs.

FEATURES OVER F85 :

Superlite butted Alloy frame with carbon fiber seatstays, Felt 1.3 High Modulus carbon fork with carbon steerer, Shimano 2pc compact crankset, Shimano R500 wheelset w/aero spokes and Vittoria Rubino Slick tires

FRAME :

Felt Exclusive 7005 Superlite custom-butted aluminum frame with carbon fiber wishbone seatstays. Externally relieved integrated head tube, machined bottom bracket, forged dropouts with replaceable hanger and internal brake cable routing

FORK :

Felt Custom-Designed High Modulus Carbon Fiber 1.3 Fork with Carbon Steerer

DRIVETRAIN :

Shimano Ultegra Rear Derailleur/105 20-speed Shifters and Front Derailleur, Shimano 2-PC Crankset with 50/34T Crankset, Shimano cassette and Chain

WHEELSET :

Shimano 500 wheelset with Aero Spokes, Vittoria Rubino slick tires

COMPONENTS :

Felt 1.4 Aluminum Bar with Ergonomic Drop, Felt 1.2 3D-Forged Stem, Felt 1.2 Saddle with Carbon Injected Base, Felt 1.2 Carbon Seatpost, Dual Pivot Aluminum Brakeset with Koolstop Cartridge Pads

F85

SIZES (cm) : 650c x 47
700c x 50 / 52 / 54 / 56 / 58 / 60 / 63

COLOR : Red

WEIGHT : 19.4 lbs.

FRAME :

Felt Exclusive 7005 F-Lite custom-butted aluminum tubing. Externally relieved integrated head tube, forged dropouts with replaceable hanger

FORK :

Felt Carbon Fiber Fork with Aluminum Steerer

DRIVETRAIN :

Shimano Ultegra Rear Derailleur/105 20-speed Shifters and Front Derailleur, FSA Gossamer Aluminum with ISIS BB with 50/36T Chainrings, 650c 53/39

WHEELSET :

Alex AKX 700c R2.0 wheelset, 700 x 23 Vittoria Action HSD Folding Tires; 650c Alex AKX R2.0TRI, 650 Felt Inertia

COMPONENTS :

Felt Aluminum Bar with Ergonomic Drop, Felt 1.2 3D-Forged Stem, Felt 1.2 Saddle with Carbon Injected Base, Felt 1.3 Carbon Seatpost, Dual Pivot Aluminum Brakeset with Koolstop Cartridge Pads

F24

SIZES (in) : 24" x 1"

COLOR : Semi-Matte Black

WEIGHT : 20.0 lbs.

FRAME :

Felt 7005 F-lite custom-butted aluminum frame with forged dropouts, Forged dropouts with replaceable hanger

FORK :

Felt carbon fiber fork

DRIVETRAIN :

Shimano Sora 16-speed derailleur and shifter set with reach adjust STI levers, Sugino Aluminum Crankset with 50/38T Chainrings

WHEELSET :

Alex double-wall aluminum rims with CNC machined sidewalls, Felt alloy hubs and stainless steel spokes

COMPONENTS :

Felt 6061 alloy micro-adjust seatpost and handlebar, Felt 1.2 3D-Forged Stem, Felt Race-lite saddle, Dual-pivot brakes with bar-top levers, Aluminum double sided pedal, flat/clipless

FELT Z SERIES

Brand new for 2007 is the Z series, reflecting Felt's recognition of the need for alternative geometry and body positioning in the quest for velocity.

With the number of road riders growing steadily each year, with it comes multiple riding styles, body types, abilities, and comfort zones. While some riders may choose the longer, stretched-out feel and steep, aggressive geometry of traditional racing frames, others may prefer a geometry that is compact, slightly more relaxed, and a body position rotated a bit more upright, as found on our new Z series frames.

One look at the frameset and there is no mistaking its race-worthy intentions. Combining massive oversized tubing for unprecedented stiffness with aggressive, sculpted tubing shapes, the Z possesses a demeanor that's unmistakably its own.

Specified with some of the most technologically advanced components available, every model within the Z-series takes full advantage of today's engineering breakthroughs. Within the range you will find state-of-the-art components such as lightweight and stiff carbon fiber cranks, compact chainrings for a broader gear range, and the latest in wheelset development to name a few. Outfitted with amenities such as adjustable stems, comfort-minded saddles, gel-enhanced handlebar tape and ergonomic handlebars, you could say the Z-series exemplifies the quest for all-day-long cutting-edge performance.

THE ALL NEW FELT Z SERIES.
RELAXED GEOMETRY. PURE VELOCITY.

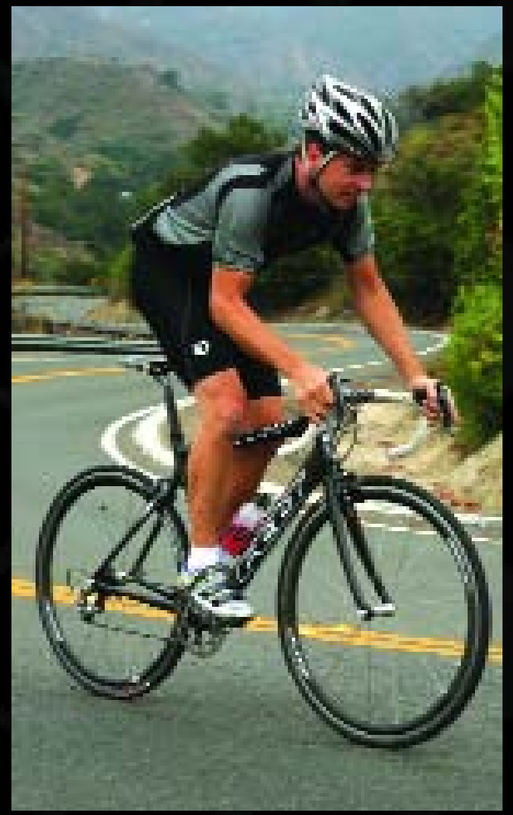

Z SERIES (CARBON) TECHNICAL DESIGN FEATURES

Modular Monoque Construction

Full Compact Frame Geometry

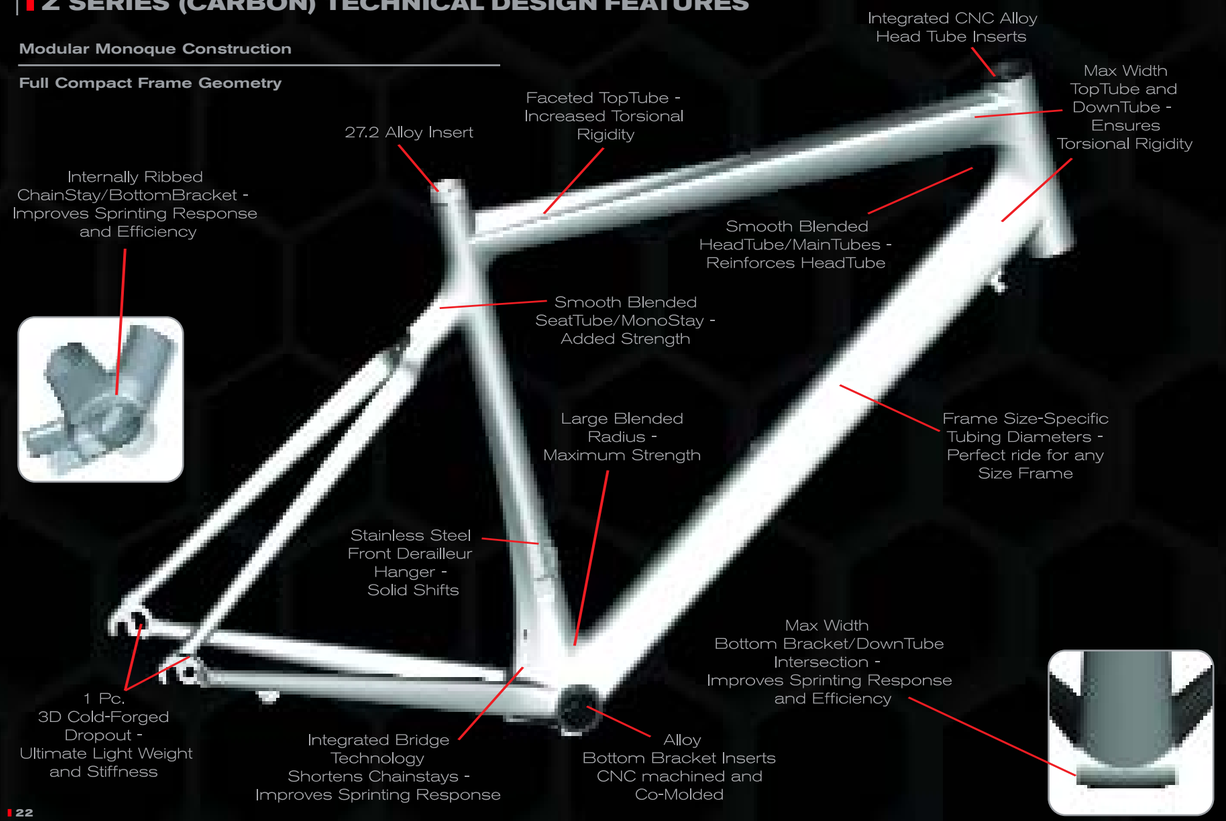

Z SERIES (ALLOY) TECHNICAL DESIGN FEATURES

Tubular Alloy & Carbon / Full Alloy Construction

Full Compact Frame Geometry

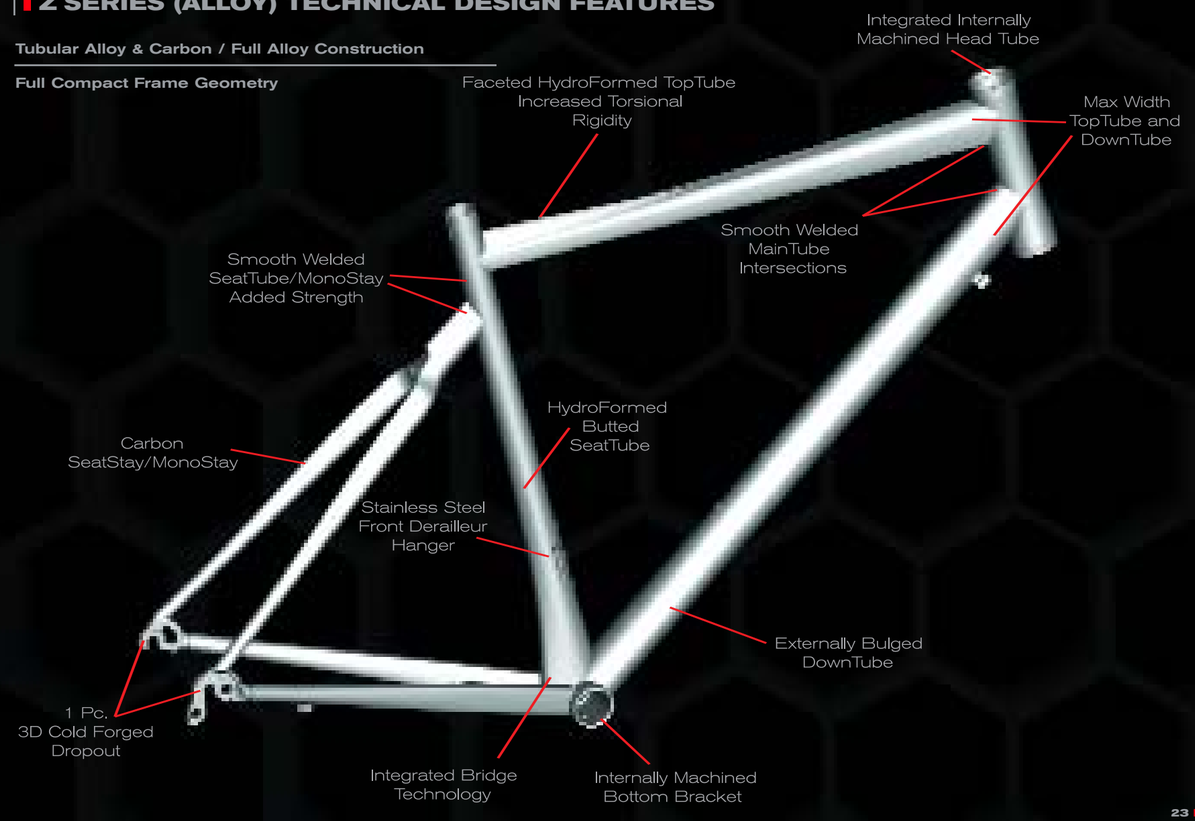

Z25

SIZES (cm) : 51 / 54 / 56 / 58 / 61

COLOR : Semi-Matte Clear Coat

WEIGHT : 17.0 lbs.

FEATURES OVER Z35 :

Felt 1.2 carbon/6061butted handlebar, Shimano Dura-Ace dual control levers and front derailleur, FSA SLK 2pc carbon crankset w/CNC 7075/T6 chainrings, Felt 2.1 leather saddle w/Cr-Mo rails, Shimano WH-R601 wheelset w/Vittoria Rubino Pro slick tires

FRAME :

New Felt Custom-Designed Relaxed Geometry Modular Monocoque Frame, with Ultra-High Modulus Carbon Fiber

FORK :

New Felt Custom-Designed High Modulus Carbon Fiber 1.3 Fork with Carbon Steerer

DRIVETRAIN :

Shimano Dura-Ace 20-speed Shifters and derailleurs, FSA SLK Mega EXO 2-PC Carbon Crankset with External BB with 50/36T 7075/T6 CNC Aluminum Chainrings

WHEELSET :

Shimano WH-R601 Wheelset, Vittoria Rubino Pro Slick Tires

COMPONENTS :

Felt 1.2 Carbon/6061 Alloy Butted Alloy Composite Bar, +/-8° or +/-16° Adjustability, Felt 2.1 Cover and Cr-Mo Rails, Felt 1.1 Shimano SLR Brakeset

Felt 2.1 3D-Forged Stem with Anatomic Saddle with Leather Carbon Monocoque Seatpost,

Z35

SIZES (cm) : 51 / 54 / 56 / 58 / 61

COLOR : Gloss Clear over Carbon with gloss Black Fade

WEIGHT : 18.0 lbs.

FRAME :

New Felt Custom-Designed Relaxed Geometry Modular Monocoque Frame, with Ultra-High Modulus Carbon Fiber

FORK :

New Felt Custom-Designed High Modulus Carbon Fiber 1.3 Fork with Carbon Steerer

DRIVETRAIN :

Shimano Dura-Ace Rear Derailleur/105 20-speed Shifters and Front Derailleur, FSA Gossamer Mega EXO Alloy 2-PC Crankset with External BB with 50/36T CNC Aluminum Chainrings

WHEELSET :

Shimano WH-R500 wheelset with Aero Spokes, Vittoria Rubino Slick Tires

COMPONENTS :

Felt 2.2 6061 Ergonomic Aluminum Bar, Felt 2.1 or +/-16° Adjustability, Felt 2.2 Anatomic Felt 1.2 Carbon Seatpost, Shimano

3D-Forged Stem with +/-8° Saddle with Cr-Mo Rails, SLR Brakeset

Z65

SIZES (cm) : 51 / 54 / 56 / 58 / 61

COLOR : Midnight Blue

WEIGHT : 17.7 lbs.

FEATURES OVER Z70 :

Shimano Ultegra dual control levers, front derailleur and Dura-Ace rear derailleur, Felt 1.3 High Modulus Carbon Fork, FSA Team ISSUE 2pc carbon crank set w/CNC machine 50/36t chainrings, ALEX ALX298R wheel set w/Vittoria Rubino Pro Slick tires

FRAME :

New Felt Custom-Designed Relaxed Geometry 7005 Superlite custom-butted aluminum frame with carbon fiber wishbone seat stays. Smooth welded front triangle, externally relieved integrated head tube, machined bottom bracket, forged dropouts with replaceable hanger and internal brake cable routing

FORK :

New Felt Custom-Designed High Modulus Carbon Fiber 1.3 Fork with Carbon Steerer

DRIVETRAIN :

Shimano Dura-Ace Rear Derailleur/Ultegra 20-speed Shifters and Front Derailleur, FSA Team Issue Mega EXO 2-PC Carbon Crankset with External BB with 50/36T CNC 7075/T6 Aluminum Chainrings

WHEELSET :

Alex ALX298R wheelset, Vittoria Rubino Pro Slick Tires

COMPONENTS :

Felt 2.1 6061 Butted Ergonomic Aluminum Bar, Felt 2.1 3D-Forged Stem with +/-8° or +/-16° Adjustability, Felt 2.1 Anatomic Saddle with Leather Cover and Cr-Mo Rails, Felt 1.2 Carbon Seatpost, Dual Pivot Aluminum Brakeset with Koolstop Cartridge Pads

Z70

SIZES (cm) : 650c x 47
700c x 51 / 54 / 56 / 58 / 61

COLOR : Matte Grey

WEIGHT : 19.6 lbs.

FEATURES OVER Z80 :

7005 Superlite custom-butted aluminum frame with carbon fiber wishbone seat stays, Shimano 105 dual control levers and front derailleur, Shimano Ultegra rear derailleur, Shimano chain, FSA Gossamer 3pc crankset, Felt 2.3 saddle

FRAME :

New Felt Custom-Designed Relaxed Geometry 7005 Superlite custom-butted aluminum frame with carbon fiber wishbone seat stays. Smooth welded front triangle, externally relieved integrated head tube, machined bottom bracket, forged dropouts with replaceable hanger and internal brake cable routing

FORK :

Felt Carbon Fiber Fork with Aluminum Steerer

DRIVETRAIN :

Shimano Ultegra Rear Derailleur/105, 30-speed Shifters and Front derailleurs, FSA Gossamer Aluminum Crankset with ISIS BB with 50/39/30T CNC 7075/T6 Aluminum Chainrings

WHEELSET :

700c Alex AKX R2.0 wheelset, Vittoria Action HSD Folding Tires, 650c Alex AKX R2.0 TRI, 650c Felt Inertia Tires

COMPONENTS :

Felt 1.4 6061 Ergonomic Aluminum Bar, Felt 2.1 3D-Forged Stem with +/-8° or +/-16° Adjustability, Felt 2.3 Anatomic wide Saddle with Cr-Mo Rails, Felt 1.3 Carbon Seatpost, Dual Pivot Aluminum Brakeset with Koolstop Cartridge Pads with Bar-Top Levers, Shimano PD-540 Pedals

Z80

SIZES (cm) : 51 / 54 / 56 / 58 / 61

COLOR : Blue

WEIGHT : 22.0 lbs.

FEATURES OVER Z90 :

27 speed, Shimano Tiagra shifters and front derailleur w/105 rear derailleur, Alex AKX2.0 wheelset, Shimano PD-R540 pedals

FRAME :

New Felt 7005 F-lite custom-butted aluminum frame. Smooth welded front tri, forged dropouts with replaceable hanger and internal brake cable routing

FORK :

Felt Carbon Fiber Fork

DRIVETRAIN :

Shimano 105 Rear Derailleur/Tiagra 27-speed Shifters and Front derailleurs, FSA Vero Aluminum Crankset with 50/39/30T Chainrings

WHEELSET :

Alex AKX R2.0 wheelset, Vittoria Action HSD Folding Tires

COMPONENTS :

Felt 1.4 6061 Ergonomic Aluminum Bar, Felt 2.1 3D-Forged Stem with +/-8° or +/-16° Adjustability, Felt 2.4 Anatomic extra wide Saddle with Cr-Mo Rails, Felt 1.3 Carbon Seatpost, Dual Pivot Caliber Type Brakeset with Bar-Top Levers, Shimano PD-540 Pedals

Z90

SIZES (cm) : 650c x 47
700c x 51 / 54 / 56 / 58 / 61

COLOR : Black Cherry or Yellow

WEIGHT : 22.3 lbs.

FRAME :

New Felt 7005 F-lite custom-butted aluminum frame. Smooth welded front tri, forged dropouts with replaceable hanger and internal brake cable routing

FORK :

Felt Carbon Fiber Fork

DRIVETRAIN :

Shimano Tiagra Rear Derailleur /Sora 27-speed Shifters and Front derailleurs, FSA Vero Aluminum Crankset with 52/42/30T Chainrings

WHEELSET :

Alex R500 double-wall alloy rims with CNC machined sidewalls, Felt alloy hubs and stainless steel spokes, Vittoria Zaffiro 25c Tires

COMPONENTS :

Felt 1.4 6061 Ergonomic Aluminum Bar, Felt 2.1 3D-Forged Stem with +/-8° or +/-16° Adjustability, Felt 2.4 Anatomic extra wide Saddle with Cr-Mo Rails, Felt 1.3 Carbon Seatpost, Dual Pivot Caliber Type Brakeset with Cartridge Pads and Bar-Top Levers, Aluminum Pedal with Toe Clip and Strap

FELT FW SERIES

INTRODUCTION BY BEVERLY LUCAS: SEASONED CYCLIST, FELT USA MARKETING MANAGER AND FIT WOMAN PRODUCT MANAGER.

When it comes to selling products, men tend to have many preconceived notions about what women want. The truth is, we're not actually all that picky. Sure, we occasionally like our purses to match our shoes but, contrary to popular belief, our lives are not predicated on such insignificant dilemmas when we clearly have bigger fish to fry.

We already make personal choices on our education, our careers, and who we pick for our partners, so when it comes to bicycles, we really don't ask for that much help. We don't need a lecture on why we need narrower handlebars because our shoulders are slimmer or why we can't reach our brake levers because our hands are smaller. But just like men, we prefer the experts to figure out the scientific stuff so we can enjoy every aspect of our ride. Our girlfriends set the standard on problem solving, but when it comes to frame geometry, body position, gear ratios and crank lengths, it sure doesn't hurt to have a few bicycle engineers on your side.

When Felt set out to develop our all-new Fit Woman (FW) line of women's bikes, I jumped at the challenge to manage the project. After all, a lifetime in the saddle tells me exactly when and where typical men's bikes fall short. We knew the FW line would never be just a few women-specific components thrown onto a men's frame and splashed with an alternative paint job. We knew it needed to be done right from the ground up, so we started with a blank sheet of paper.

Working with our engineering team, we first started by studying textbooks on anthropometry (a fancy word for the study of human body measurements). After all, women are NOT proportionally smaller than men and therefore simply reducing a men's bike proportionally would never achieve our goal. We knew we needed to achieve the perfect body position by factoring in the many different features of a woman's body. Once we translated the critical variances in usable, numeric terms, the engineering team was able to work backwards, maintaining that ideal body position while adjusting the frame geometry to properly fit a woman. Beyond the geometry, we also tailored each individual tube's wall thickness to maintain the lively, reactive, comfortable "Felt feel" regardless of differences in body weight and power. Speaking on behalf of the many women involved in this project, I can tell you the result is one amazing ride.

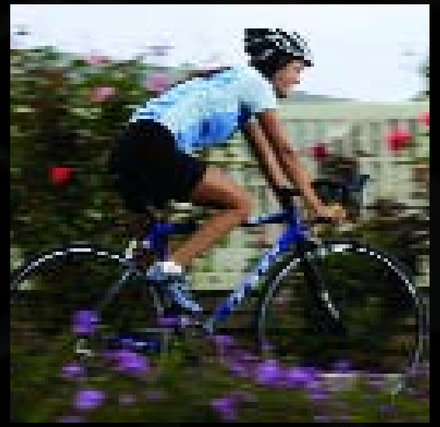

Just as important as the ride is the look. Reflecting on hundreds of personal conversations with women riders the world over, coupled (of course!) with my own personal cycling and industry experience, I know we have also chosen colors and graphics to suit even the most discerning taste.

From the stem size to the saddle, from the crank length to the Q factor, every single specification has been carefully selected to ideally accommodate a woman's physique. In short, we have tailored the FW line to reflect our individual styles and high standards for quality and excellence, but most importantly, to give you a bicycle that loves you as much as you love to ride.

THE NEW FW SERIES FROM FELT BICYCLES. BE YOU. BE A FIT WOMAN™.

FW SERIES TECHNICAL DESIGN FEATURES

Tubular Aluminum / Carbon Fiber Modular Construction

Woman Specific Full Compact Frame Geometry

FW2

SIZES (cm) : 650c x 43
700c x 47 / 49 / 52

COLOR : Semi-Matte Black

FEATURES OVER FW3 :

Felt 1.2 Ultra-Modulus Carbon Monocoque fork, Dura-Ace derailleurs, Shimano Ultegra 2pc crankset, Felt 1.1 carbon handlebar, Shimano SLR brake set, Easton Vista SL wheelset, Vittoria Diamante Pro light tires

FRAME :

New Felt Custom-Designed Women's Geometry 7005 Superlite custom-butted aluminum frame with carbon fiber wishbone seat stays. Smooth welded front triangle, externally relieved integrated head tube, machined bottom bracket, forged dropouts with replaceable hanger and internal brake cable routing

FORK :

New Felt Custom-Designed Monocoque 1.2 Fork, with Ultra-High Modulus Carbon Fiber

DRIVETRAIN :

Shimano Dura-Ace Front and Rear Derailleur / ST-R700 20-speed Shifters Shimano Ultegra Crankset 53/39T Chainrings

WHEELSET :

Easton Vista SL wheelset, Vittoria Diamante Pro-Light Tires

COMPONENTS :

Felt 1.1 Superlite Full Carbon Bar, Felt Fit Woman 1.1 3D-Forged Stem, Felt FIT Woman Leather Saddle with hollow Cr-mo rails, Felt 1.2 Carbon seatpost, Shimano SLR Brakeset

FW3

SIZES (cm) : 650c x 43
700c x 47 / 49 / 52

COLOR : Orange Pearl

FEATURES OVER FW4 :

7005 Superlite custom-butted aluminum frame with carbon fiber wishbone seat stays, Felt 1.3 High Modulus Carbon Fork with Carbon Steerer, FSA Gossamer 2pc crankset, Alex AKX R2.0 wheelset w/aero spokes and Vittoria Rubino Slick tires

FRAME :

New Felt Custom-Designed Women's Geometry 7005 Superlite custom-butted aluminum frame with carbon fiber wishbone seat stays. Smooth welded front triangle, externally relieved integrated head tube, machined bottom bracket, forged dropouts with replaceable hanger and internal brake cable routing

FORK :

New Felt Custom-Designed High Modulus Carbon Fiber 1.3 Fork with Carbon Steerer

DRIVETRAIN :

Shimano Ultegra Rear Derailleur/ ST-R700 20-speed Shifters with 105 Front Derailleur, FSA Gossamer Mega EXO 2-PC Crankset with External BB and 50/36T CNC 7075/T6 Aluminum Chainrings, 650c 53/39T

WHEELSET :

Alex AKX R2.0 wheelset, Vittoria Rubino Slick Tires, 650c Alex AKX R2.0 TRI, 650c Vittoria Rubino

COMPONENTS :

Felt 2.2 6061 Double Butted Ergonomic Aluminum Bar, Felt Fit Woman 2.1 3D-Forged Stem with +/-8° or +/-16° Adjustability, Felt FIT Woman Saddle, Felt 1.2 Carbon seatpost, Dual Pivot Aluminum Brakeset with Koolstop Cartridge Pads

FW4

SIZES (cm) : 650c x 43
700c x 47 / 49 / 52

COLOR : Electric Blue

FRAME :

New Felt 7005 F-lite custom-butted aluminum frame. Smooth welded front triangle, forged dropouts with replaceable hanger and internal brake cable routing

FORK :

Felt Carbon Fiber Fork

DRIVETRAIN :

Shimano Tiagra Front and Rear Derailleur/ST-3300 8-speed Shifters with 24-speed Shifters with FSA Vero Aluminum Crankset with 50/39/30T Chainrings

WHEELSET :

Alex R500 double-wall alloy rims with CNC machined sidewalls Felt alloy hubs and stainless steel spokes, Vittoria Zaffiro 23c Tires, Felt Inertia

COMPONENTS :

Felt 2.2 6061 Double Butted Ergonomic Aluminum Bar, Felt Fit Woman 2.1 3D-Forged Stem with +/-8° or +/-16° Adjustability, Felt FIT Woman Saddle, Felt 1.3 Carbon Seatpost, Dual Pivot Caliber Type Brakeset with Cartridge Pads and Bar-Top Levers, Aluminum Pedal with Toe Clip and Strap

FELT TRIATHLON / TT SERIES

The race of truth: One rider against the road, wind, and time. With no teammates to pull you through and no wheel to draft, Triathlon and Time Trial require not only a strong engine, but also a vehicle that is ergonomically and aerodynamically advantaged. Racers must convert every last ounce of energy into raw speed, and use it to slice through wind like a razor.

No bicycle company has devoted more time, energy, and passion into creating aerodynamically enhanced bicycles than Felt. After all, Triathlon/TT is what propelled our brand to the forefront of the sport nearly two decades ago. Model names such as DA and B2 are legendary in the Tri world; renowned not only for their aerodynamic supremacy, but for their stealthy black finishes and aggressive, threatening demeanors.

Year after year, Felt engineers have continued to elevate aerodynamic performance and elevate the sport. Whether it's trickling-down key features and critical tube shapes to sibling models, or setting new records for wind-defiance with all-new design platforms, each year Felt pushes the envelope beyond imagination.

The 2007 model year is no exception. It is this year in which Felt sets a new aerodynamic benchmark with the brand-new wind tunnel developed and proven carbon fiber DA frameset system. Not just a frame, but a completely thought-out frame system comprised of a frame, fork, and stem, blended together as a single unit, making it the fastest UCI legal bike in our wind tunnel testing. Felt took advantage of every possible millimeter of space permitted within the rules, making the DA aerodynamically peerless.

Every single bicycle within our Triathlon/TT lineup benefits from the design and development taking place in the wind tunnel and on the race course. Whether you're a first time competitor or a seasoned racer, within the Felt line there's a model to meet your performance requirements as well as your budget.

AT FELT, YOU HAVE THE ABILITY TO BUY SPEED.

Refining aerofoil surfaces in the wind tunnel.

Experimenting with clay enhancements on CNC resin prototype.

DA / B2 FRAME INTRODUCTION

You are looking at the fastest UCI legal Tri / TT bike built today. Developed over two years, with careful use of NACA aerofoil profiles, CFD flow modeling and wind tunnel experimentation, the DA frame system delivers unsurpassed aerodynamic advantage with incredible drive-train and steering stiffness.

The DA features our revolutionary Bayonet Steering System which moves the steerer outside of the frame, improving steering stiffness 60% over a regular fork, while significantly reducing the aerodynamic drag on the bike.

The aerodynamic advantage does not stop with the obvious innovations of the frame: The Bayonet Steering System integrates an adjustable stem, which with refined frame geometry and the new Felt 3.1 carbon fiber multi-position seat post, allows a comfortable, laid-down, flat back riding position. Such a riding position can help you drop seconds on your personal best by enlisting less fasttwitch muscle fibers, and allowing smoother airflow across your torso.

DA / B2 TECHNICAL DESIGN FEATURES

Modular Monoque Construction

Triathlon / TT Specific Frame Geometry

Twin Position Seat Post – Allows a UCI legal Time Trial rear position, or a comfortable yet aggressively aerodynamic forward position

Aero Seat Post Shaft – only 19.4mm wide, removable for travel case compatibility

Aero Seat Post Clamp – The threaded part is replaceable, so a ham-fisted turn of the wrench does not destroy your frame as with many aero clamp designs

Rear Wheel Cutout – Our wind tunnel testing shows that, when compared with the 2006 B2, this reduces aerodynamic drag on the bicycle by 5.4% (30mph@15°).

Horizontal Rear Dropouts – allows you to tuck the rear wheel into the wheel cutout no matter what size of tire you use.The set-screws incorporated into the dropouts permit fast, secure wheel changes.

Top Tube Cable Entry – While many tri bikes position the cables where they disturb the airflow around their carefully shaped aerofoil frame tubes, we route the cables into the frame behind the stem, where airflow is already turbulent.

Internal Cable Routing – our wind tunnel testing shows that this reduces aerodynamic drag on the bicycle by 4.62% (30mph@15°).

Front Wheel Cutout – Reduced flow separation between the front wheel and down tube.

Chainstay Mounted Brake – By repositioning the brake in the 'dirty' air between the cranks, we removed the aerodynamic profile of the brake caliper from the seat stay. Our wind tunnel testing shows that this reduces aerodynamic drag on the bicycle by 4% (30mph@0°). Moving the brake caliper to the chainstay also lowers the bikes center of gravity to improve cornering response.

Bayonet Adjustable Stem – Each bike is supplied with three stem extensions, which can be angled at 10° increments to facilitate your most efficient ride position.

Bayonet Fork System – Improves the effective aspect ratio of the bikes leading aerofoil, while improving steering stiffness 60%. Our wind tunnel testing shows that, when compared with a regular aero blade fork, this reduces aerodynamic drag on the bicycle by 4.07% (30mph@0°).

1" Integrated Head Tube – Our integrated head sets allow undisturbed airflow across the frame. The 1" steerer size reduces the frames frontal area and thus aerodynamic drag.

DA

SIZES (cm) : 650c x 48, 50
700c x 52 / 54 / 56 / 58 / 60

COLOR : Semi-Matte Clear Coat

WEIGHT : 16.7 lbs.

FEATURES OVER B2 :

UHC- Ultra-Hybrid Carbon Modular Monocoque Tri/TT frame, Felt 3.1 UHC Ultra-Hybrid Carbon Modular fork, Felt 3.1 integrated stem, Zipp VUKA carbon base bar w/carbon R bend extensions, Shimano Dura-Ace crankset, BB, cassette, chain and brakeset, Zipp brake levers, Felt 3.1 Tri saddle w/CrN/Ti rails, Zipp 808 wheelset w/Vittoria Triathlon Evo CS Tubular tires

FRAME :

New Felt Custom-Designed TRI/TT Modular Monocoque Frame, with Pro Grade UHC (Ultra Hybrid Carbon)

FORK :

New Bayonet Steering System with Felt Custom-Designed UHC (Ultra Hybrid Carbon) Monocoque Leading Edge Aero Fork, Carbon Dropouts and Felt 3.1 Adjustable Stem

DRIVETRAIN :

Shimano Dura-Ace Group, Shimano Dura-Ace Crankset 54-42T for 700, 55/44T for 650c Chainrings

WHEELSET :

Zipp Carbon 808 Tubular Wheelset with Dimpled Rims for 700, Vittoria Triathlon Evo CS Tubular for 700; Zipp Carbon 404 Tubular Wheelset with Dimpled Rims for 650c, Corsa Evo CX Tubular for 650c

COMPONENTS :

Zipp Vuka Carbon base bar and extension bars with levers, Felt 3.1 Bayonet Steering System Adjustable Stem with 3 stem extension lengths, Felt 3.1 TRI Saddle with Carbon Injected Base, Extended CrN/Ti Rails and leather cover, Felt 3.1 Carbon Aero Seatpost with Double offset Adjustment.

B2

SIZES (cm) : 650c x 48, 50
700c x 52 / 54 / 56 / 58 / 60

COLOR : Gloss Clear over Carbon

WEIGHT : 18.3 lbs.

FEATURES OVER S22 :

New Ultra-High Modulus Modular Carbon Tri/TT frame set, Easton EC90 Aero carbon fork, FSA Vision alloy base bar w/R bend carbon extensions, Shimano Ultegra front derailleur, FSA Krono Aero crankset, Tektro Aero brake levers, Easton Vista SL wheelset w/Vittoria Rubino Slick tires

FRAME :

Felt Custom-Designed TRI/TT Modular Monocoque Frame, with Ultra-High Modulus Carbon Fiber

FORK :

Easton EC90 Aero High Modulus Carbon Monocoque Fork with CNT; Carbon Steerer and EMC compression-molded carbon drop outs

DRIVETRAIN :

Shimano Dura-Ace Bar-end Shifters and Rear Derailleur, Ultegra 20-speed Front Derailleur, FSA Krono 3-PC Aero Aluminum Crankset with ISIS BB, Carbon Spider and 54/42T for 700c and 55/44T for 650c Carbon Chainrings

WHEELSET :

Easton Vista SL, Vittoria Rubino Pro Slick Tires

COMPONENTS :

FSA VISION Alloy base bar and Carbon Extensions with FSA VISION brake levers, Felt 3.2 CNC 7075 Aluminum Stem, Felt 3.2 Saddle with Carbon Injected Base with extended rails and leather cover, Felt 3.1 Carbon Aero Seatpost with Double offset Adjustment, Shimano SLR Brakeset

S22

SIZES (cm) : 650c x 48, 50
700c x 52 / 54 / 56 / 58 / 60

COLOR : Semi-Matte Black

WEIGHT : 20.0 lbs.

FEATURES OVER S32 :

7005 Superlite custom-butted aluminum frame with full aero seat tube with wheel cut out, aero downtube and carbon fiber wishbone seat stays, Shimano Dura-Ace rear derailleur, Shimano SLR dual pivot brakes, Felt 3.2 Tri saddle w/Cr-Mo rails, Felt 3.1 carbon aero seatpost with double offset adjustment, ALEX 295R aero wheelset w/Vittoria Rubino Pro Slick tires

FRAME :

Felt 7005 Superlite custom-butted aluminum frame with full aero seat tube with wheel cut out, aero downtube and carbon fiber wishbone seat stays. Externally relieved integrated head tube, machined bottom bracket, forged dropouts with replaceable hanger and internal brake cable routing

FORK :

Felt Airfoil carbon fiber fork

DRIVETRAIN :

Shimano Dura-Ace 20-speed Rear Derailleur and Bar-end Shifters, 105 Rear Derailleur, FSA Gossamer Mega EXO 2-PC Crankset with External BB and 53/39T for 700 and 55/44 for 650c CNC 7075/T6 Aluminum Chainrings

WHEELSET :

Alex ALX 295R Aero wheelset, Vittoria Rubino Pro Slick Tires

COMPONENTS :

Felt Aluminum base bar with Profile R Bend T2+ extensions, Felt Grade 3.3 3D-Forge Aluminum Stem, Felt 3.2 Saddle with Carbon Injected Base with extended rails and leather cover, Felt 3.1 Carbon Aero Seatpost with Double offset Adjustment, Shimano SLR Brakeset

S32

SIZES (cm) : 650c x 48, 50
700c x 52 / 54 / 56 / 58 / 60

COLOR : Bright Red

WEIGHT : 20.4 lbs.

FRAME :

Felt 7005 Superlite custom-butted aluminum frame with aero seat tube with cut out, aero downtube and A style seat stays. Externally relieved integrated head tube, machined bottom bracket, forged dropouts with replaceable hanger and internal brake cable routing

FORK :

Felt Airfoil carbon fiber fork

DRIVETRAIN :

Shimano Dura-Ace 20-speed Bar-end Shifters, Ultegra Rear Derailleur and 105 Front Derailleur

WHEELSET :

Shimano 500 wheelset with aero spokes, Vittoria Action HSD folding tires

COMPONENTS :

Felt Aluminum base bar with Profile Aerolite extension bars, Felt 3.3 3D-Forge Aluminum Stem, Felt 3.3 Saddle with Carbon Injected Base with extended rails, Felt Alloy Seatpost with dual positioning adjustment, Dual Pivot Aluminum Brakeset with Koolstop Cartridge Pads, FSA Gossamer Mega EXO 2-PC Crankset with External BB and 53/39T for 700 and 55/44 CNC 7075/T6 Aluminum Chainrings

T43

SIZES (cm) : 700c x 50 / 52 / 54 / 56 / 58 / 60

COLOR : Yellow

WEIGHT : 21.5 lbs.

FRAME :

Felt 7005 Superlite custom-formed aerodynamic aluminum frame with Aero seat tube with wheel cut out. Externally relieved integrated head tube, machined bottom bracket, forged dropouts with replaceable hanger and internal brake cable routing

FORK :

Felt Airfoil Carbon Fiber Fork

DRIVETRAIN :

Shimano 105 Rear Derailleur, Tiagra 18-speed shifters and Front derailleurs, FSA Gossamer Crankset with and 50/36T CNC 7075/T6 Aluminum Chainrings

WHEELSET :

Alex AKX R2.0 wheelset, Vittoria Action HSD Folding Tires

COMPONENTS :

New Felt 6061 Ergonomic Aluminum Bar with Clip-on extensions, Felt 1.2 3D-Forged Stem, Felt 3.3 Saddle with Carbon Injected Base with extended rails, Felt Alloy Seatpost with dual positioning adjustment, Dual Pivot Aluminum Brakeset with Cartridge Pads

FELT TRACK/TK2 INTRODUCTION

If you're in the market for a track bike, you already know the TK2's intended purpose: To take your relationship with the thin red line to the next level.

Track racing has been around for well over a century and is one of the most exciting and dynamic disciplines in the entire sport of cycling. It's predominantly about riding solo, with your number one competitor being the clock. Brakeless, and with a single fixed gear, its breed is often used as a tool for honing strength, stamina and technique. The TK2 reciprocates with all the benefits of a professional level machine.

Weighing in at a featherlight 15.9 lbs (56cm) and featuring semi-aerodynamic tubing and a rear wheel cutout, the TK2 is built for unbridled speed. The oversized and bi-ovalized downtube delivers unbelievable stiffness at the bottom bracket. Put the TK2 into a sprint and feel the unwavering acceleration for yourself.

The 48x15T gearing is ideal for both concrete or wood, short tracks or long. Shorter track-specific cranks ensure you maintain your confidence in a quick flick up the banking and through the corners.

The TK2 continues to be a bike of choice for several major track racing venues, including the Velodrome at Bloomer Park, Michigan, the Forest City Velodrome in London, Ontario, as well as The Home Depot Center in Carson, California.

"FAST, LIGHT, AND STIFF, FELT'S TK2 CANNOT BE EXCEEDED. WHETHER JUST STARTING OUT ON THE TRACK OR UPGRADING FOR BETTER RESULTS, THE TK2 IS THE ANSWER."

- ROGER YOUNG : US OLYMPIC CYCLING COACH

Luke Davison of Australia racing the TK2.

TK2

SIZES (cm) : 52 / 54 / 56 / 58 / 60

COLOR : Semi-Matte Black

WEIGHT : 15.9 lbs.

FRAME :

Felt 7005 Superlite custom-butted aluminum frame with wishbone seat stays. Externally relieved integrated head tube, machined bottom bracket, aero cut-away seat tube with bulge butted down tube, forged dropouts.

FORK :

Felt Airfoil Carbon Fiber straight-blade fork with alloy steer tube with brake hole

DRIVETRAIN :

Sugino 75 Track Crank with 48T Chainring & 15t Rear Cog

WHEELSET :

Alex 390 Double-Wall Rims with Eyelets and DT Doubled Butted Champion Spokes, Felt Precision Sealed-Bearing Track Hubs with Flip-Flop Rear Hub, Vittoria Rubino Pro Slick Tires

COMPONENTS :

Deda Oversized Aluminum Track Handlebar, Felt 1.1 3D-Forged Stem, Felt 1.1 Saddle with Carbon Injected Base, Felt 6061 Aluminum Seatpost

FELT CYCLOCROSS/F1-X INTRODUCTION

If you've ever been to a cyclocross race, it has probably been in the depths of winter with at least a few inches of mud on the ground. Precipitation is a given, and races are won and lost in a battle against all that Mother Nature can throw at you. Designed to combat these conditions, the F1X also allows riders to utilize their bike handling skills to the maximum.

Built from proprietary double-butted Superlight 7005 aluminum tubing- still the material of choice of some of the world's best cross riders – the F1X is tailored specifically for off-road use. Since so much time is spent riding on the brake hoods - for greater stability and control through the rough as well as for easy dismounts - its compact geometry provides greater standover clearance, allowing you to easily adopt a more upright position to do so. An oversized carbon fiber fork minimizes vibration and helps take the edge off the harsh stuff.

Since traction and mud clearance are essential, we allow plenty of space in the frame to accommodate the grungiest 35c tire. Rerouting the cables along the underside of the downtube keeps them out of the way for effective shouldering and lessens the build up of contaminants that can inhibit shifting. Cantilever type brakes are utilized for maximum braking power under wet conditions, as well as providing additional mud clearance.

THE F1X IS DESIGNED TO BEAT BOTH THE ELEMENTS AND THE COMPETITION. BRING ON THE RAIN.

Mark McCormack racing the F1X.

F1X

SIZES (cm) : 49 / 51 / 53 / 55 / 57 / 59

COLOR : Semi-Matte Black

WEIGHT : 20.7 lbs.

FRAME :

Felt 7005 Superlite custom-butted aluminum frame. Externally relieved integrated head tube, forged dropouts with replaceable hanger

FORK :

Carbon fiber fork with cantilever brake pivots

DRIVETRAIN :

Shimano Ultegra Rear Derailleur, 105 20-speed Shifters and Front Derailleur, FSA Gossamer Mega EXO 2-PC Crankset with External BB and 46/36T CNC 7075/T6 Aluminum Chainrings

WHEELSET :

Mavic CXP-22 Double-Wall Rims and DT Doubled Butted Champion Spokes, Felt Precision Sealed-Bearing Hubs, Kenda Cyclocross tires

COMPONENTS :

Felt 1.3 6061 Butted Alloy Bar, Felt 1.1 3D-Forged Stem, Felt 1.1 Saddle with Carbon Injected Base, Felt 6061 Aluminum Seatpost, Tektro Oryx brakes with Tektro RX bar-top levers

FRAMESETS

F1

SIZES (cm) : 50 / 52 / 54 / 56 / 58 / 60

COLOR : Semi-Matte Clear Coat

WEIGHT : 900 grams (56cm)

FRAME :

Felt Custom-Designed Modular Monocoque Frame, with New UHC (Ultra Hybrid Carbon)

FORK :

New Felt Custom-Designed Monocoque 1.1 Fork, with UHC (Ultra Hybrid Carbon) and Carbon Dropouts

COMPONENTS :

Ritchey WCS Carbon Seatpost, FSA IS-2 integrated headset, Felt Lightweight 7075 CNC Aluminum Seatpost Clamp with Titanium Bolt and Scandium Nutbar

Z1

SIZES (cm) : 700c x 51 / 54 / 56 / 58 / 61

COLOR : Semi-Matte Clear Coat

WEIGHT : 900 grams (56cm)

FRAME :

New Felt Custom-Designed Relaxed Geometry Modular Monocoque Frame with UHC (Ultra Hybrid Carbon)

FORK :

New Felt Custom-Designed Monocoque 1.1 Fork with UHC (Ultra Hybrid Carbon) and Carbon Dropouts

COMPONENTS :

Ritchey WCS Carbon Seatpost, FSA IS-2 integrated headset, Felt Lightweight 7075 CNC Aluminum Seatpost Clamp with Titanium Bolt and Scandium Nutbar

CA1

SIZES (cm) : 50 / 52 / 54 / 56 / 58 / 60

COLOR : Bright Red

WEIGHT : 1400 grams (56cm)

FRAME :

Felt custom-designed double-butted 7000 Series Kinesium frame with carbon fiber wishbone seat stays. Externally relieved integrated head tube, machined bottom bracket, forged dropouts with replaceable hanger and internal brake cable routing

FORK :

Reynolds OUZO COMP Modulus Fork with High Modulus Carbon Fiber and Reynolds Compression device

COMPONENTS :

Felt Carbon Seatpost, FSA IS-2 integrated headset, Felt Lightweight 7075 CNC Aluminum Seatpost Clamp with Titanium Bolt and Scandium Nutbar

TK2

SIZES (cm) : 52 / 54 / 56 / 58 / 60

COLOR : Semi-Matte Black

WEIGHT : 1500 grams (56cm)

FRAME :

Felt 7005 Superlite custom-butted aluminum frame with wishbone seat stays. Externally relieved integrated head tube, machined bottom bracket, aero cut-away seat tube with bulge butted down tube, forged dropouts

FORK :

Felt Airfoil Carbon Fiber straight-blade fork with alloy steer tube with brake hole

COMPONENTS :

Felt 6061 Aluminum Seatpost, FSA IS-2 intergrated headset, Felt Lightweight 7075 CNC Aluminum Seatpost Clamp with Titanium Bolt and Scandium Nutbar

DA

SIZES (cm) : 650c x 48 / 50
700c x 52 / 54 / 56 / 58 / 60

COLOR : Semi-Matte Clear Coat

WEIGHT : 1200 grams (56cm)

FRAME :

New Felt Custom-Designed TRI/TT Modular Monocoque Frame, with UHC (Ultra Hybrid Carbon)

FORK :

New Bayonet Steering System with Felt Custom-Designed UHC (Ultra Hybrid Carbon) Monocoque Leading Edge Aero Fork, Carbon Dropouts and Felt 3.1 Adjustable Stem

COMPONENTS :

Felt 3.1 Bayonet Steering System Adjustable Stem with 3 stem extension lengths, FSA IS-2A integrated headset, Felt 3.1 Carbon Aero Seatpost with Double offset Adjustment.

B2

SIZES (cm) : 650c x 48 / 50
700c x 52 / 54 / 56 / 58 / 60

COLOR : Semi-Matte Clear Coat

WEIGHT : 1350 grams (56cm)

FRAME :

Felt Custom-Designed TRI/TT Modular Monocoque Frame, with Ultra-High Modulus Carbon Fiber

FORK :

Easton EC90 Aero High Modulus Carbon Monocoque Fork with CNT; Carbon Steerer and EMC compression-molded carbon drop outs

COMPONENTS :

FSA IS-2A integrated headset, Felt 3.1 Carbon Aero Seatpost with Double offset Adjustment

F SERIES SPECIFICATIONS

MODEL	F1	F2	F3	F4	F55	F75	F85	F24
COLORS	Semi-matte Clear	Gloss Clear over Carbon	Gloss Clear over Carbon	Gloss Clear Over Carbon w/Gloss Black Fade	Semi-matte Black	Semi-matte Black	Red	Semi-matte Black
SIZES	700c x 50, 52, 54, 56, 58, 60	700c x 50, 52, 54, 56, 58, 60	700c x 50, 52, 54, 56, 58, 60	50, 52, 54, 56, 58, 60	50, 52, 54, 56, 58, 60, 63	50, 52, 54, 56, 58, 60, 63	650c x 47 700c x 50, 52, 54, 56, 58, 60, 63	24" Wheel x 40cm
FRAME	Felt UHC Ultra Hybrid Carbon Modulus Modular Carbon Fiber Frame with 3K Finish. Forged Dropout & Replaceable Hanger.	Ultra-High Modulus Modular Carbon Fiber Frame with 3KP Finish. Forged Dropout & Replaceable Hanger.	Ultra-High Modulus Modular Carbon Fiber Frame with 3KP Finish. Forged Dropout & Replaceable Hanger	High Modulus Modular Carbon Fiber Frame with UD Finish. Forged Dropout & Replaceable Hanger	Custom Butted Super-light 7005 Aluminum w/carbon seat stays, CNC'd head tube & BB shell, forged dropouts w/replaceable hanger	Custom Butted Super-light 7005 Aluminum w/carbon seat stays, CNC'd head tube & BB shell, forged dropouts w/replaceable hanger	Custom Butted F-Lite 7005 Alloy w/bulged seat tube and butted chainstays, CNC'd head tube & BB shell, forged dropouts w/replaceable hanger	Felt F-Lite 7005 Alloy Frame, Butted Main Tubes with Forged Dropout & Replaceable Hanger.
FORK	Felt 1.1 UHC Ultra Hybrid Carbon Modulus Modular Carbon Fiber Frame with 3K Finish, Carbon Blades, Dropouts, Crown & 1-1/8" Steerer w/Felt Compression Device	Felt 1.2 Ultra-High Modulus Carbon Monocoque Design with 3KP Finish, Carbon Blades, Crown & 1-1/8" Steerer, Aluminum Dropouts w/Felt Compression Device	Felt 1.2 Ultra-High Modulus Carbon Monocoque Design w/ 3KP Finish, Carbon Blades, Crown & 1-1/8" Steerer, Aluminum Dropouts w/Felt Compression Device	1.3 High Modulus Carbon Design with UD Finish, Carbon Blades, Crown & 1-1/8" Steerer, Aluminum Dropouts w/Felt Compression Device	Felt 1.3 High Modulus Carbon Design with 3K Finish, Carbon Blades, Crown & 1-1/8" Steerer, Aluminum Dropouts w/Felt Compression Device	Felt 1.3 High Modulus Carbon Design with 3K Finish, Carbon Blades, Crown & 1-1/8" Steerer, Aluminum Dropouts w/Felt Compression Device	Felt Carbon Design with 3K Finish, Carbon Fiber Blades w/1-1/8" Aluminum Steerer and Alloy Crown	Carbon blades with 1-1/8" CRM Steerer and Alloy Crown
HEADSET	FSA 1-1/8" Integrated	FSA 1-1/8" Integrated	FSA 1-1/8" Integrated	FSA 1-1/8" Integrated	FSA 1-1/8" Integrated	FSA 1-1/8" Integrated	FSA 1-1/8" Integrated	Aheadset 1-1/8"
STEM	Ritchey WCS 4-Axis Aluminum 3D Forged with 6/84° Rise, 50cm-52cm=100mm, 54cm-60cm=110mm	Felt 1.1 6061 Aluminum 3D Forged w/5° Rise, 50cm-52cm=100mm, 54cm-60cm=110mm	Felt 1.1 6061 Aluminum 3D Forged w/5° Rise, 50cm-52cm=100mm, 54cm-60cm=110mm	Felt 1.2 6061 Alumnim 3D Forged w/7° Rise, 50cm-52cm=90mm, 54cm-56cm=100mm, 58cm-60cm=110mm	Felt 1.2 6061 Alumnim 3D Forged w/7° Rise, 50cm-52cm=90mm, 54cm-56cm=100mm, 58cm=110mm, 60cm-63cm=120mm	Felt 1.2 6061 Alumnim 3D Forged w/7° Rise, 50cm-52cm=90mm, 54cm-56cm=100mm, 58cm=110mm, 60cm-63cm=120mm	Felt 1.2 6061 Alumnim 3D Forged w/7° Rise, 47cm=80mm, 50cm-52cm=90mm, 54cm-56cm=100mm, 58cm=110mm, 60cm-63cm=120mm	Felt 1.2 6061 Aluminim 3D Forged w/7° Rise, 80cm
HANDLEBAR	Felt 1.1 Superlite Full Carbon,3K finish w/Ergonomic Drop, Ø31.8mm, 50cm=400mm, 52cm-54cm=420mm, 56cm-60cm=440mm	Felt 1.2 Carbon/6061 Butted Alloy Composite with Ergonomic Drop, Ø31.8mm, 50cm=400mm, 52cm-54cm=420mm, 56cm-60cm=440mm	Felt 1.2 Carbon/6061 Butted Alloy Composite with Ergonomic Drop, Ø31.8mm, 50cm-52cm=100mm, 54cm-60cm=110mm	Felt 1.3 6061 Butted Aluminum with Ergonomic Drop, Ø31.8mm	Felt 1.3 6061 Butted Aluminum w/Ergonomic Drop, Ø31.8mm, 50cm=400mm, 52cm-54cm=420mm, 56cm-63cm=440mm	Felt 6061 Aluminum w/Ergonomic Drop, Ø31.8mm, 50cm=400mm, 52cm-54cm=420mm, 56cm-63cm=440mm	Felt 6061 Aluminum w/Ergonomic Drop, Ø31.8mm, 47cm-50cm=400mm, 52cm-54cm=420mm, 56cm-63cm=440mm	Felt Ø26mm 6061 Alloy w/Ergonomic Drop, 26.0mm, 370mm
GRIPS	Felt Gel Ribbon Tape with Felt 3D Logo	Felt Gel Ribbon Tape with Felt 3D Logo	Felt Gel Ribbon Tape with Felt 3D Logo	Felt Gel Ribbon Tape with Felt 3D Logo	Felt Gel Ribbon Tape with Felt 3D Logo	Felt Gel Ribbon Tape with Felt 3D Logo	Felt Gel Ribbon Tape with Felt 3D Logo	Felt Gel Ribbon Tape with Felt 3D Logo
SHIFTERS	Shimano Dura-Ace, 20 speed	Shimano Dura-Ace, 20 speed	Shimano Dura-Ace, 20 speed	Shimano Ultegra, 20 speed	Shimano Dura-Ace, 20 speed	Shimano 105, 20-Speed	Shimano 105, 20-Speed	Shimano, 24 speed
F/DERAILLEUR	Shimano Dura-Ace	Shimano Dura-Ace	Shimano Dura-Ace	Shimano Ultegra	Shimano Dura-Ace	Shimano 105	Shimano 105	Shimano Sora
R/DERAILLEUR	Shimano Dura-Ace	Shimano Dura-Ace	Shimano Dura-Ace	Shimano Dura-Ace	Shimano Dura-Ace	Shimano Ultegra	Shimano Ultegra	Shimano Sora
CRANKSET	Shimano Dura-Ace, 53/39T	Shimano Dura-Ace, 53/39T	Shimano Ultegra, 53/39T	Shimano Ultegra, 53/39T	Shimano Ultegra, 53/39T	Shimano, 2-PC, FC-R600, 50/34T	FSA Gossamer, 3-PC Alloy w/CNC 7075/T6 Alloy Chainrings and ISIS BB, 50/36T; 650c 53/39	Sugino XD-2200, 2-PC Alloy, 50/38T, 160mm length
BB SET	Shimano Dura-Ace Hollowtech-II	Shimano Dura-Ace Hollowtech-II	Shimano Hollowtech-II	Shimano Hollowtech-II	Shimano Hollowtech-II	Shimano Hollowtech-II	Cartridge with Cr-Mo ISIS Spindle	FSA Cartridge with Cr-Mo JIS Spindle
CHAIN	Shimano Dura-Ace, 10-Speed	Shimano 10-Speed	Shimano 10-Speed	Shimano 10-Speed	Shimano 10-Speed	Shimano 10-Speed	Shimano 10-Speed	Z8 8-Speed
FREEWHEEL	Shimano Dura-Ace 10-Speed Cassette, 11-23T	Shimano 10-Speed Cassette, 11-23T	Shimano 10-Speed Cassette, 11-23T	Shimano 10-Speed Cassette, 11-23T	Shimano 10-Speed Cassette, 11-23T	Shimano 10-Speed Cassette, 12-25T	Shimano 10-Speed Cassette, 12-25T	Shimano 8-Speed Cassette, 12-23T
BRAKE LEVERS	Shimano Dura-Ace Dual Control	Shimano Dura-Ace Dual Control	Shimano Dura-Ace Dual Control	Shimano Ultegra Dual Control	Shimano Dura-Ace Dual Control	Shimano 105 Dual Control	Shimano 105 Dual Control	Shimano Sora Dual Control w/Tektro top mount levers
BRAKES	Shimano Dura-Ace Super SLR Dual Pivot w/Cartridge Brake Shoes	Shimano Dura-Ace Super SLR Dual Pivot w/Cartridge Brake Shoes	Shimano Ultegra Super SLR Dual Pivot w/Cartridge Brake Shoes	Shimano Super SLR Dual Pivot w/Cartridge Brake Shoes	Shimano Super SLR Dual Pivot w/Cartridge Brake Shoes	Dual Pivot w/Kookstop Cartridge Brake Shoes, Stainless Hardware & Teflon Bushings	Dual Pivot w/Kookstop Cartridge Brake Shoes, Stainless Hardware & Teflon Bushings	Dual Pivot, Cartridge Brake Shoes, Stainless Hardware and Teflon Bushings
SADDLE	Selle Italia SLR with Ti Rails	Felt 1.1 Road Saddle w/Carbon Injected Base, leather cover and Cr-Mo rails	Felt 1.1 Road Saddle w/Carbon Injected Base, leather cover and Cr-Mo rails	Felt 1.1 Road Saddle w/Carbon Injected Base, leather cover and Cr-Mo rails	Felt 1.1 Road Saddle w/Carbon Injected Base, leather cover and Cr-Mo rails	Felt 1.2 Road Saddle w/Carbon Injected Base and Cr-Mo rails	Felt 1.2 Road Saddle w/Carbon Injected Base and Cr-Mo rails	Felt JR Racing
SEAT POST	Ritchey WCS Carbon, 27.2mm, 300mm	Felt 1.1 Carbon Monocoque Design, 27.2mm, 300mm	Felt 1.1 Carbon Monocoque Design, 27.2mm, 300mm	Felt 1.1 Carbon Monocoque Design, 27.2mm, 300mm	Felt 1.1 Carbon Monocoque Design, 27.2mm, 300mm	Felt 1.2 Carbon, 27.2mm, 300mm	Felt 1.3 Carbon, 27.2mm, 300mm	Felt Alloy Micro Adjust, 27.0mm, 250mm
F/HUB	Cosmic Carbon SL Premium, Aluminum with QRM+ Bearings, 16H	Shimano Dura-Ace WH-7801SL, Aluminum, 16H	Mavic Ksyrium Equipe, Aluminum w/QRM Bearings, 20H	Mavic Aksium, Aluminum w/QRM Bearings, 20H	Mavic Aksium, Aluminum w/QRM Bearings, 20H	Shimano WH-R500-A, 20H	Alex AKX R2.0 Alloy, 20H; 650 Alex AKX R2.0 TRI Alloy, 20H	Felt sealed alloy QR
R/HUB	Cosmic Carbon SL Premium, Aluminum with QRM+ Bearings, 20H	Shimano Dura-Ace WH-7801SL, Aluminum, 20H	Mavic Equipe, Aluminum w/QRM Bearings, 24H	Mavic Aksium, Aluminum w/QRM Bearings, 24H	Mavic Aksium, Aluminum w/QRM Bearings, 24H	Shimano WH-R500-A, 24H	Alex AKX R2.0 Alloy, 24H; 650 Alex AKX R2.0 TRI Alloy, 24H	Felt sealed alloy QR, cassette, black
RIMS	Cosmic Carbon SL Premium, Mavtal and 12K Carbone Fiber w/UB Control	Shimano Dura-Ace WH-7801SL Scandium w/25mm Rim Profile and Offset Rear. Both Road Tubeless & Regular Tube and Tire Compatible	Mavic Ksyrium Equipe, Aluminum w/UB Control	Mavic Aksium, Aluminum w/UB Control	Mavic Aksium, Aluminum w/UB Control	Shimano WH-R500 Aero Alloy Double-Wall w/CNC Sidewalls	Alex AKX R2.0 with CSW Braking Surface; 650 Alex AKX R2.0 TRI with CSW Braking Surface	24 x 1" Alex w/CNC sides
TIRES	Vittoria Diamante Pro-Light Folding 700x23c	Vittoria Diamante Pro-Light Folding 700x23c	Vittoria Rubino Pro Slick Folding 700x23c	Vittoria Rubino Pro Slick Folding 700x23c	Vittoria Rubino Pro Slick Folding 700x23c	Vittoria Rubino Slick Folding 700x23c	Vittoria H5D Folding 700x23c; 650 Felt Inertia 650x23c	24 x 1" Kenda Koncept with Flat Protection
SPOKES	Mavic Carbone SL, Straight Pull Spokes	Shimano Dura-Ace WH-7801SL, Butted and Bladed Spokes	Mavic Ksyrium Equipe, Aero Straight Pull Spokes	Mavic Aksium, Aero Spokes	Mavic Aksium, Aero Spokes	Shimano WH-R500-A, Aero Spokes	Alex AKX R2.0, Round Spokes; 650c Alex AKX R2.0 TRI, Round Spokes	Stainless 15G
PEDALS								Dual Pedals, Alloy Clipless One Side Flat Other Side

All specifications subject to change without notice due to availability.

Z SERIES SPECIFICATIONS

MODEL	Z25	Z35	Z65	Z70	Z80	Z90
COLORS	Semi-matte Clear	Gloss Clear over Carbon w/Gloss Black Fade	Midnight Blue	Matte Gray	Blue	1) Yellow 2) Black Cherry
SIZES	51, 54, 56, 58, 61	51, 54, 56, 58, 61	51, 54, 56, 58, 61	650c x 47; 700c x 51, 54, 56, 58, 61	51, 54, 56, 58, 61	650c x 47; 700 x 51, 54, 56, 58, 61
FRAME	Felt 2007 Relaxed Racing Specific Geometry. Ultra-High Modulus Modular Carbon Fiber Frame with3K Finish. Forged Dropout & Replaceable Hanger	Felt 2007 Relaxed Racing Specific Geometry. Ultra-High Modulus Modular Carbon Fiber Frame with UD Finish. Forged Dropout & Replaceable Hanger	Felt 2007 Relaxed Racing Specific Geometry. Felt Super-light Custom Butted 7005 Aluminum with Smooth Welding and Carbon Seat Stays, CNC'd Head Tube & BB Shell, Forged Dropout and Replaceable Hanger	Felt 2007 Relaxed Racing Specific Geometry. Felt Super-light Custom Butted 7005 Aluminum with Smooth Welding and Carbon Seat Stays, CNC'd Head Tube & BB Shell, Forged Dropout and Replaceable Hanger	Felt 2007 Relaxed Racing Specific Geometry Felt F-Lite Butted 7005 Aluminum with Smooth Welding, Forged Dropout and Replaceable Hanger	Felt 2007 Relaxed Racing Specific Geometry Felt F-Lite Butted 7005 Aluminum with Smooth Welding, Forged Dropout & Replaceable Hanger
FORK	Felt 1.3 High Modulus Carbon Design with 3K Finish, Carbon Blades, Crown & 1-1/8" Steerer, Aluminum Dropouts with Felt Compression Device	Felt 1.3 High Modulus Carbon Design with UD Finish, Carbon Blades, Crown & 1-1/8" Steerer, Aluminum Dropouts with Felt Compression Device	Felt 1.3 High Modulus Carbon Design with 3K Finish, Carbon Blades, Crown & 1-1/8" Steerer, Aluminum Dropouts with Felt Compression Device	Felt Carbon Design with 3K Finish, Carbon Fiber Blades w/1-1/8" Aluminum Steerer and Alloy Crown	Felt Carbon Design with Carbon Fiber Blades, 1-1/8" Cr-Mo Steerer and Alloy Crown	Felt Carbon Design with Carbon Fiber Blades, 1-1/8" Cr-Mo Steerer and Alloy Crown
HEADSET	FSA 1-1/8" Integrated	FSA 1-1/8" Integrated	FSA 1-1/8" Integrated	FSA 1-1/8" Integrated	FSA 1-1/8" Integrated	Aheadset 1-1/8"
STEM	Felt 2.1 Adjustable 6061 3D Forged w/+/-8-16 Degree Rise, 51cm=80mm, 54cm=90mm, 56cm=100mm, 58cm-61cm=110mm	Felt 2.1 Adjustable 6061 3D Forged w/+/-8-16 Degree Rise, 51cm=80mm, 54cm=90mm, 56cm=100mm, 58cm-61cm=110mm	Felt 2.1 Adjustable 6061 3D Forged w/+/-8-16 Degree Rise, 51cm=80mm, 54cm=90mm, 56cm=100mm, 58cm-61cm=110mm	Felt 2.1 Adjustable 6061 3D Forged w/+/-8-16 Degree Rise, 47cm-51cm=80mm, 54cm=90mm, 56cm=100mm, 58cm-61cm=110mm	Felt 2.1 Adjustable 6061 3D Forged w/+/-8-16 Degree Rise, 51cm=80mm, 54cm=90mm, 56cm=100mm, 58cm-61cm=110mm	Felt 2.1 Adjustable 6061 3D Forged w/+/-8-16 Degree Rise, 47cm-51cm=80mm, 54cm=90mm, 56cm=100mm, 58cm-61cm=110mm
HANDLEBAR	Felt 1.2 Carbon/6061 Butted Alloy Composite w/Ergonomic Drop, Ø31.8mm, 51cm=400mm, 54cm-56cm=420mm, 58cm-61cm=440mm	Felt 2.2 Relaxed Racing Specific Geometery 6061 Aluminum w/Ergonomic Drop, Ø31.8mm, 51cm=400mm, 54cm-56cm=420mm, 58cm-61cm=440mm	Felt 2.1 Relaxed Racing Specific Geometery 6061 Double Butted Aluminum w/Ergonomic Drop, Ø31.8mm, 51cm=400mm, 54cm-56cm=420mm, 58cm-61cm=440mm	Felt 6061 Aluminum w/Ergonomic Drop, Ø31.8mm, 47-51cm=400mm, 54cm-56cm=420mm, 58cm-61cm=440mm	Felt 6061 Aluminum w/Ergonomic Drop, Ø31.8mm, 51cm=400mm, 54cm-56cm=420mm, 58cm-61cm=440mm	Felt 6061 Aluminum w/Ergonomic Drop, Ø31.8mm, 47-51cm=400mm, 54cm-56cm=420mm, 58cm-61cm=440mm
GRIPS	Felt Gel Ribbon Tape with Felt 3D Logo	Felt Gel Ribbon Tape with GEL Inserts and Felt 3D Logo	Felt Gel Ribbon Tape with GEL Inserts and Felt 3D Logo	Felt Gel Ribbon Tape with GEL Inserts and Felt 3D Logo	Felt Gel Ribbon Tape with GEL Inserts and Felt 3D Logo	Felt Gel Ribbon Tape with GEL Inserts and Felt 3D Logo
SHIFTERS	Shimano Dura-Ace, 20 speed	Shimano 105, 20-Speed	Shimano Ultegra, 20-Speed	Shimano 105, 30-Speed	New Shimano TIAGRA, 27-Speed	Shimano Sora, 24-Speed
F/DERAILLEUR	Shimano Dura-Ace	Shimano 105	Shimano Ultegra	Shimano 105	New Shimano TIAGRA	Shimano Sora
R/DERAILLEUR	Shimano Dura-Ace	Shimano Dura-ace	Shimano Dura-ace	Shimano Ultegra 10-SPEED	Shimano 105 10-SPEED	NEW Shimano Tiagra
CRANKSET	FSA SLK, 2PC Carbon with CNC 7075/T6 Alloy Chainrings, 50/36T	FSA Gossamer, 2-PC Alloy with CNC 7075/T6 Alloy Chainrings, 50/36T	FSA TEAM ISSUE, 2-PC Carbon with CNC 7075/T6 Alloy Chainrings, 50/36T	FSA Gossamer, 3-PC Alloy with CNC 7075/T6 Alloy Chainrings and ISIS BB, 50/39/30T	New FSA VERO, 3-PC Alloy Cold Forge 9-Speed, 50/39/30T	New FSA VERO, 3-PC Alloy Cold Forge 8-Speed Triple 52/42/30T
BB SET	FSA MegaExo	FSA MegaExo	FSA MegaExo	FSA Cartridge with Cr-Mo ISIS Spindle	FSA Cartridge with Cr-Mo JIS Spindle	FSA Cartridge with Cr-Mo JIS Spindle
CHAIN	Shimano 10-Speed	Shimano 10-Speed	Shimano 10-Speed	Shimano 10-Speed	X9 9-Speed	Z8 8-Speed
FREEWHEEL	Shimano 10-Speed Cassette, 11-25T	Shimano 10-Speed Cassette, 11-25T	Shimano 10-Speed Cassette, 11-25T	Shimano 10-Speed Cassette, 11-25T	Shimano 9-Speed Cassette, 12-25T	Shimano 8-Speed Cassette, 12-25T
BRAKE LEVERS	Shimano Dura-Ace Dual Control	Shimano 105 Dual Control	Shimano Ultegra Dual Control	Shimano 105 Dual Control w/Tektro top mount levers	NEW Shimano TIAGRA w/Tektro top mount levers	Shimano Sora, 24-Speed w/Tektro top mount levers
BRAKES	Shimano Super SLR Dual Pivot with Cartridge Brake Shoes	Shimano Super SLR Dual Pivot with Cartridge Brake Shoes	Dual Pivot, Kookstop Cartridge Brake Shoes with New and Improved Compound, Stainless Hardware and Teflon Bushings	Dual Pivot, Kookstop Cartridge Brake Shoes with New and Improved Compound, Stainless Hardware and Teflon Bushings	Dual Pivot, Cartridge Brake Shoes with New and Improved Compound, Stainless Hardware and Teflon Bushings	Dual Pivot, Cartridge Brake Shoes with New and Improved Compound, Stainless Hardware and Teflon Bushings
SADDLE	Felt 2.1 Anatomic Road Saddle with double density base, leather cover and Cr-Mo rails	Felt 2.2 Anatomic Road Saddle with double density base and Cr-Mo rails	Felt 2.1 Anatomic Road Saddle with double density base, leather cover and Cr-Mo rails	Felt 2.3 Anatomic Road Saddle with double density base and Cr-Mo rails	Felt 2.4 Anatomic Road Saddle with double density base and Cr-Mo rails	Felt 2.4 Anatomic Road Saddle with double density base and Cr-Mo rails
SEAT POST	Felt 1.1 Carbon Monocoque Design, 27.2mm, 350mm	Felt 1.2 Carbon, 27.2mm, 350mm	Felt 1.2 Carbon, 27.2mm, 350mm	Felt 1.3 Carbon, 27.2mm, 350mm	Felt 1.3 Carbon, 27.2mm, 350mm	Felt 1.3 Carbon, 27.2mm, 350mm
F/HUB	Shimano WH-R601, 16H	Shimano WH-R500-A, 20H	Alex ALX 29BR with Machined Bearings, 20H	Alex AKX R2.0 Alloy, 20H; 650c Alex AKX R2.0 TRI Alloy, 20H	Alex AKX R2.0 Alloy, 20H	Felt sealed alloy QR
R/HUB	Shimano WH-R601, 20H	Shimano WH-R500-A, 24H	Alex ALX29BR with 4 Machined Bearings, 24H	Alex AKX R2.0 Alloy, 24H; 650c Alex AKX R2.0 TRI Alloy, 24H	Alex AKX R2.0 Alloy, 24H	Felt sealed alloy QR, cassette, black
RIMS	Shimano WH-R601, 6061 Alloy with CNC Sidewalls	Shimano WH-R500 Aero Alloy Double-Wall with CNC Sidewalls	Alex ALX29BR A-Class EXA Material with CSW Braking Surface	Alex AKX R2.0 with CSW Braking Surface; 650c Alex AKX R2.0 TRI with CSW Braking Surface	Alex AKX R2.0 with CSW Braking Surface	Alex R500 Double-Wall w/CNC sides
TIRES	Vittoria Rubino PRO Slick Folding 700x23c	Vittoria Rubino Slick Folding 700x23c	Vittoria Rubino Pro Slick Folding 700x23c	Vittoria H5D Folding 700x23c; 650c Felt Inertia 650x23c	Vittoria Zaffiro Folding 700x23c	Vittoria Zaffiro 700x25c; 650c Felt Inertia 650x26c
SPOKES	Shimano WH-R601, Bladed Spokes	Shimano WH-R500-A, Aero Spokes	Alex ALX 29BR, DT Spokes	Alex AKX R2.0, Round Spokes; 650c Alex AKX R2.0 TRI, Round Spokes	Alex AKX R2.0, Round Spokes	Stainless 14G
PEDALS				Shimano PD-R540 without Cleat	Shimano PD-R540 without Cleat	Aluminum Toe Clip and Strap Road Design

All specifications subject to change without notice due to availability.

TRI SERIES SPECIFICATIONS

MODEL	DA	B2	S22	S32	T43
COLORS	Semi-matte Clear	Semi-matte Clear	Semi-matte Black	Bright Red	Yellow
SIZES	650c x 48,50 700c x 52, 54, 56, 58, 60	650c x 48,50 700c x 52, 54, 56, 58, 60	650c x 48,50 700c x 52, 54, 56, 58, 60	650c x 48,50 700c x 52, 54, 56, 58, 60	50, 52, 54, 56, 58, 60
FRAME	Felt 2007 Tri Specific UHC Ultra Hybrid Composite Modulus Modular Carbon Fiber Frame w/3KP Finish. Forged Dropout & Replaceable Hanger	Felt 2007 Tri Specific Superlight Ultra-High Modulus T700 Modular Carbon Fiber Frame with 3K Finish. Forged Dropout & Replaceable Hanger	Felt 2007 Tri Specific Custom Butted Super-light 7005 w/Carbon Seat Stays, FILLL Aero Seat Tube & Down Tube w/Cut Away, CNC'd Head Tube & BB Shell, Forged Dropout & Replaceable Hanger	Felt 2007 Tri Specific Custom Butted Super-light 7005 w/Aero Seat Tube & Down Tube w/Cut Away and Cold Forged Seat Stay Yoke, CNC'd Head Tube & BB Shell, Forged Dropout & Replaceable Hanger.	Felt 2007 Olympic Style Custom Butted Super-light 7005 w/"A" Style Seat Stays, Semi-Aero Seat Tube & Down Tube, CNC'd Head Tube & BB Shell, Forged Dropout & Replaceable Hanger.
FORK	Felt 3.1 UHC Ultra Blend Composite Modulus Modular Carbon Fiber Monocoque Design w/3KP Finish, Carbon Blades, Dropouts, Crown & 1" Steerer w/Felt Compression Device	EASTON EC90 AERO High Modulus Carbon Design w/3K Finish, Carbon Blades, Crown & 1" Steerer, Aluminum Dropouts w/Felt Compression Device	Felt Airfoil Straight Carbon blades w/1" Cr-Mo Steerer	Felt Airfoil Straight Carbon blades w/1" Cr-Mo Steerer	Olympic Specific Felt Carbon Fiber w/1-1/8" Alloy Steerer and Crown
HEADSET	FSA 1" Integrated	FSA 1" Integrated	FSA 1" Integrated	FSA 1" Integrated	FSA 1-1/8" Integrated
STEM	Felt 3.1 Integrated into Fork, -10+40° Rise of adjustability, 48-52cm=80, 90, 100mm, 54cm-56cm=90, 100, 110mm, 58cm-60cm= 90, 100, 110mm	Felt 3.2 CNC'd 7075AL w/0° Rise, 48cm=60mm, 50cm=80mm, 52cm=90mm, 54cm-56cm=100mm, 58cm-60cm=110mm	Felt 3.3 3D Forge 6061AL w/0° Rise, 48cm=60mm, 50cm=80mm, 52cm=90mm, 54cm-56cm=100mm, 58cm- 60cm=110mm	Felt 3.3 3D Forge 6061AL w/0° Rise, 48cm=60mm, 50cm=80mm, 52cm=90mm, 54cm-56cm=100mm, 58cm-60cm=110mm	Felt 1.2 6061 Aluminim 3D Forged w/7° Rise, 50cm-52cm=90mm, 54cm-56cm=100mm, 58cm=110mm, 60cm=120mm
HANDLEBAR	ZIPP VUKA Carbon Basebar and Carbon R Bend Extension, 26.0mm, 410mm	FSA VISION Alloy Cowbar and NEW Carbon R Bend Extension, 26.0mm, 48cm-54cm=400mm, 56cm-60cm=420mm	Felt Basebar w/NEW Profile Design R Bend T2+ Extensions, 26.0mm, 48cm-52cm=400mm, 54cm-56cm=420mm, 58cm-60cm=440mm	Profile Design Aerolite Extensions on Felt Base Bar, 26.0mm, 48cm-52cm=400mm, 54cm-56cm=420mm, 58cm-60cm=440mm	Felt 6061 Aluminum w/Ergonomic Drop, Ø31.8mm w/L Bend UTI Approved Extensions, 50cm=400mm, 52cm-54cm=420mm, 56cm-60cm=440mm
GRIPS	Felt Gel Ribbon Tape with Felt 3D Logo	Felt Gel Ribbon Tape with Felt 3D Logo	Felt Gel Ribbon Tape with Felt 3D Logo	Felt Gel Ribbon Tape with Felt 3D Logo	Felt Gel Ribbon Tape with Felt 3D Logo
SHIFTERS	Shimano Dura-Ace, 20 speed	Shimano Dura-Ace, 20 speed	Shimano Dura-Ace, 20 speed	Shimano Dura-Ace, 20-Speed	New Shimano Tiagra 9-Speed
F/DERAILLEUR	Shimano Dura-Ace	Shimano Ultegra	Shimano 105	Shimano 105	New Shimano Tiagra
R/DERAILLEUR	Shimano Dura-Ace	Shimano Dura-Ace	Shimano Dura-Ace	Shimano Ultegra	Shimano 105 10-Speed
CRANKSET	Shimano Dura-Ace, 54/42T; 650c 55/42T	FSA Krono, 3-PC Aluminum Aero Crank and Carbon Spider w/CNC 7075/T6 Carbon Aero Chainrings, 54/42T for 700c; 650c 55/44T	FSA Gossamer, 2-PC Alloy w/Super CNC Alloy Chainrings: 53/39T for 700c; 650c 54/42T, 48cm-50cm=170mm, 52cm-54cm=172.5mm, 56cm- 60cm=175mm	FSA Gossamer, 2-PC Alloy w/CNC Alloy Chainrings: 53/39T for 700c; 650c 54/42T	FSA Gossamer, 3-PC Alloy w/CNC 7075/T6 Alloy Chainrings and ISIS BB, 50/36T
BB SET	Shimano Hollowtech-II	FSA Cartridge with Cr-Mo ISIS Spindle	FSA MegaExo	FSA MegaExo	Cartridge with Cr-Mo ISIS Spindle
CHAIN	Shimano Dura-Ace 10-Speed	Shimano 10-Speed	Shimano 10-Speed	Shimano 10-Speed	X9 9-Speed
FREEWHEEL	Shimano Dura-Ace 10-Speed Cassette, 12-23T; 650c 11-23T	Shimano 10-Speed Cassette,12-23T: 650c 11-23T	Shimano 10-Speed Cassette, 11-23T	Shimano 10-Speed Cassette, 11-23T	Shimano Tiagra 9-Speed Cassette, 11-25T
BRAKE LEVERS	ZIPP Aero Levers, Bar End Type	Tektro Aero Levers, Bar End Type	Tektro RX4.1 Bar End Type	Tektro RX4.1 Bar End Type	Shimano Tiagra Dual Control w/Tektro top mount levers
BRAKES	Shimano Dura-Ace	Shimano Super SLR Dual Pivot w/Kooktop Cartridge Brake Shoes Front & Dual Pivot, Stainless Hardware and Teflon Bushings;R	Shimano Super SLR Dual Pivot w/Cartridge Brake Shoes	Dual Pivot, Kooktop Cartridge Brake Shoes w/New and Improved Compound, Stainless Hardware and Teflon Bushings	Dual Pivot, Cartridge Brake Shoes w/New and Improved Compound, Stainless Hardware and Teflon Bushings
SADDLE	Felt 3.1 TRI Saddle w/carbon Injected base, gel nose, waterproof leather cover and extended CRN/TI rails	Felt 3.2 TRI Saddle w/carbon Injected base, gel nose, waterproof leather cover and extended Cr-Mo rails	Felt 3.2 TRI Saddle w/carbon Injected base, gel nose, waterproof leather cover and extended Cr-Mo rails	Felt 3.3 TRI Saddle w/carbon Injected base, gel nose, waterproof cover and extended Cr-Mo rails	Felt 3.3 TRI Saddle w/carbon Injected base, gel nose, waterproof cover and extended Cr-Mo rails
SEAT POST	Felt 3.1 Carbon Aero-Pro w/Double Offset, 320mm	Felt 3.1 Carbon Aero-Pro with Double Offset, 320mm	Felt 3.1 Carbon Aero-Pro with Double Offset, 320mm	Felt Alloy, w/dual positioning adjustment	Felt Alloy, w/dual positioning adjustment
F/HUB	Zipp 82, 18H	Easton Vista SL, 20H	ALEX ALX 295R w/Sealed Bearings, 20H; 650c Alex ALX320 COMP TRI w/Japanese Sealed Bearings, 20H	Shimano R500-A w/Flat Spokes; 650c Alex AKX R2.0 TRI Alloy, 20H	Alex AKX R2.0 Alloy, 20H
R/HUB	Zipp 182, 24H	Easton Vista SL, 24H	ALEX ALX 295R w/Sealed Bearings, 24H; 650c Alex ALX320 COMP TRI w/Japanese Sealed Bearings, 24H	Shimano R500-A with Flat Spokes; 650c Alex AKX R2.0 TRI Alloy, 24H	Alex AKX R2.0 Alloy, 24H
RIMS	Zipp Carbon 808 Tubulars; 650c Zipp Carbon 404 Tubulars	Easton Vista SL w/CNC Sidewalls 700 and 650	ALEX ALX 295R A-Class EXA Material w/CSW Braking Surface; 650c Alex ALX320 COMP TRI A-Class EXA Material w/CSW Braking Surface	Shimano R500-A w/Flat Spokes; 650c Alex AKX R2.0 TRI w/CSW Braking Surface	Alex AKX R2.0 w/CSW Braking Surface
TIRES	Vittoria Triathlon Evo CS Tubular 21x28; 650 Corsa Evo CX Tubular 20x26	Vittoria Rubino Pro Slick Folding 700x23c; 650c Vittoria Diamante Pro-Light Folding 650x23c	Vittoria Rubino PRO Slick Folding 700x23c; Vittoria Rubino PRO Folding 650x23c	Vittoria Rubino Slick Folding 700x23c; Vittoria Rubino Folding 650x23c	Vittoria Action HSD Foldable 700x23c
SPOKES	Sapim CX	Easton Vista SL Double Butted	ALEX ALX 295R, AERO Spokes; 650c Alex ALX320 COMP, DT Spokes	Shimano R500-A, Flat Spokes; 650c Alex AKX R2.0 TRI, Round Spokes	Alex AKX R2.0, Flat Spokes

MODEL	TK2	F1X
COLORS	Semi-matte Black	Semi-matte Black
SIZES	52, 54, 56, 58, 60	49, 51, 53, 55, 57, 59
FRAME	Track Specific Custom Butted Super-light 7005, Semi Aero seat Down Tube and Seat Tube	Cyclocross Specific Custom Butted Super-light 7005, CNC'd Head Tube & BB Shell, Forged Dropout & Replaceable Hanger.
FORK	Track Specific Felt Carbon Fiber w/1-1/8" Alloy Steerer and Crown	Cyclocross Specific Felt Carbon Fiber w/1-1/8" Alloy Steerer and Crown
HEADSET	FSA 1-1/8" Integrated	Aheadset 1-1/8" Integrated
STEM	Felt ST-22 6061 3D Forged with 5° Rise	Felt 1.1 6061 Aluminum 3D Forged w/5° Rise, 49cm=80mm, 51cm-53cm=90mm, 55cm-100mm, 57cm-59cm=110mm
HANDLEBAR	Deda Piste Alloy, Ø31.8mm 420mmm	Felt 1.3 6061 Butted Aluminum w/Ergonomic Drop, Ø31.8mm, 49cm=400mm, 51cm-53cm=420mm, 55cm-59cm=440mm
GRIPS	Felt Gel Ribbon Tape with Felt 3D Logo	Felt Gel Ribbon Tape with Felt 3D Logo
SHIFTERS	n/a	Shimano 105 10-Speed
F/DERAILLEUR	n/a	Shimano 105
R/DERAILLEUR	n/a	Shimano Ultegra 10-Speed
CRANKSET	Sugino 75 Track, 3-PC CNC Alloy Chainring 48T	FSA Gossamer, 2-PC Alloy with CNC 7075/T6 Alloy Chainrings, 46/36t with 110 BCD
BB SET	Sugino 75	FSA MegaExo
CHAIN	Z510HX	Shimano 10-Speed
FREEWHEEL	Shimano 15T Locking Fixed Sprocket	Shimano 10-Speed Cassette, 11-25T
BRAKE LEVERS	n/a	Shimano 105 Dual Control w/Tektro top mount levers
BRAKES	n/a	Tektro Orx Cyclocross Cantilevers with Improved Cartridge brake shoes
SADDLE	Felt 1.1 Road Saddle with Carbon Injected Base, leather cover and Cr-Mo rails	Felt 1.1 Road Saddle with Carbon Injected Base, leather cover and Cr-Mo rails
SEAT POST	Felt SM-3 Alloy	Felt Alloy Micro Adjust, 27.2mm, 300mm
F/HUB	Felt Hi-Flange Cartridge 32H	Felt Sealed Cartridge Alloy 32H
R/HUB	Felt Double-Threaded Hi-Flange Cartridge	Felt Sealed Cartridge Alloy, Cassette 32H
RIMS	Alex ALX390 w/double eyelets with Black Sidewalls	Mavic CXP-22 w/CNC sides
TIRES	Vittoria Rubino Pro Slick Folding 700x23c	Kenda Kwick 700 x 35c
SPOKES	DT 14/15G Black	DT Double Butted 15/14G

All specifications subject to change without notice due to availability.

FW SERIES SPECIFICATIONS

MODEL	FW2	FW3	FW4
COLORS	Semi-matte Black	Orange Pearl	Electric Blue
SIZES	650c x 43; 700c x 47, 49, 52	650c x 43;, 700c x 47, 49, 52	650c x 43;, 700c x 47, 49, 52
FRAME	Felt 2007 Womens Specific Custom Butted Super-light 7005 w/carbon seat stays w/smooth welding, bulged seat tube, CNC'd head tube & BB shell, forged dropouts w/replaceable hanger	Felt 2007 Womens Specific Custom Butted Super-light 7005 w/carbon seat stays w/smooth welding, bulged seat tube, CNC'd head tube & BB shell, forged dropouts w/replaceable hanger	Felt 2007 Womens Specific Custom Butted F-Lite 7005 Alloy w/smooth welding, forged dropouts and replaceable hanger
FORK	Fit Woman 1.2 Ultra-High Modulus Carbon Monocoque Design with 3KP Finish, Carbon Blades, Crown & 1-1/8" Steerer, Aluminum Dropouts w/Felt Compression Device; 650c Felt Carbon Design with 3K Finish, Carbon Fiber Blades w/1-1/8" Cr-Mo Steerer and Alloy Crown	Fit Woman 1.3 High Modulus Carbon Design with 3K Finish, Carbon Blades, Crown & 1-1/8" Steerer, Aluminum Dropouts w/Felt Compression Device; 650c Felt Carbon Design with 3K Finish, Carbon Fiber Blades w/1-1/8" Cr-Mo Steerer and Alloy Crown	Fit Woman Carbon Design with UD Finish, Carbon Fiber Blades w/1-1/8" Cr-Mo Steerer and Alloy Crown
HEADSET	FSA 1-1/8" Integrated	FSA 1-1/8" Integrated	Aheadset 1-1/8"
STEM	Felt Fit Woman 1.1 6061 Aluminim 3D Forged w/5° Rise, 43cm=80mm, 47cm=90cm-49cm=90mm, 52cm=100mm	Felt Fit Woman 2.1 Adjustable 6061 3D Forged w/+/-8-16 Degree Rise, 43cm=80mm, 47cm=80mm, 49cm=90mm, 52cm=100mm	Felt Fit Woman 2.1 Adjustable 6061 3D Forged w/+/-8-16 Degree Rise, 43cm-47cm=80mm, 49cm=90mm, 52cm=100mm
HANDLEBAR	Felt 1.1 Superlite Full Carbon, 3K finish w/Ergonomic Drop, Ø31.8mm, 650c Felt 2.2 Relaxed Racing Specific Geometery 6061 Aluminum w/ Ergonomic Drop 43cm=380mm, 47cm-49cm=400mm, 52cm=420mm	Felt Fit Woman 2.2 Relaxed Racing Specific Geometery 6061 Aluminum w/Ergonomic Drop, Ø31.8mm, 43cm=380mm, 47cm-49cm=400mm, 52cm=420mm	Felt Fit Woman 2.2 Relaxed Racing Specific Geometery 6061 Aluminum w/Ergonomic Drop, Ø31.8mm, 43cm=380mm, 47cm-49cm=400mm, 52cm=420mm
GRIPS	Felt Gel Ribbon Tape with Felt 3D Logo	Felt Gel Ribbon Tape with Felt 3D Logo	Felt Gel Ribbon Tape with GEL and Felt 3D Logo
SHIFTERS	Shimano ST-R700, 20 Speed	Shimano ST-R700, 20 Speed	Shimano ST-R700, 20 Speed
F/DERAILLEUR	Shimano Dura-Ace	Shimano 105	Shimano Sora
R/DERAILLEUR	Shimano Dura-Ace	Shimano Ultegra	NEW Shimano Tiagra
CRANKSET	Shimano Ultegra, 53/39T	FSA Gossamer, 2-PC Alloy with CNC 7075/T6 Alloy Chainrings, 50/36t; 650c 53/39T	NEW FSA VERO, 3-PC Alloy Cold Forge 8-Speed Triple 52/42/30TT
BB SET	Shimano Hollowtech II	FSA MegaExo	FSA Cartridge with Cr-Mo JIS Spindle
CHAIN	Shimano 10-Speed	Shimano 10-Speed	Z8 8-Speed
FREEWHEEL	Shimano 10-Speed Cassette, 11-25T	Shimano 10-Speed Cassette, 11-25T	Shimano 8-Speed Cassette, 12-25T
BRAKE LEVERS	Shimano Ultegra Level Dual Control	Shimano Ultegra Level Dual Control	Shimano Sora Dual Control w/Top Mount Levers
BRAKES	Shimano Super SLR Dual Pivot with Cartridge Brake Shoes	Dual Pivot, Kooktop Cartridge Brake Shoes with New and Improved Compound, Stainless Hardware and Teflon Bushings	Dual Pivot, Cartridge Brake Shoes with New and Improved Compound, Stainless Hardware and Teflon Bushings
SADDLE	Fit Woman Lite w/Leather Cover with Cr-Mo Rails	Fit Woman Anatomic Lite with Cr-Mo Hollow Rails	Fit Woman Anatomic Lite with Cr-Mo Hollow Rails
SEAT POST	Felt Carbon Micro-Adjust 0 offset	Felt Carbon Micro-Adjust 0 offset	Felt Alloy Micro-Adjust 0 offset
F/HUB	Easton Vista SL, 20H	Alex AKX R2.0 Alloy, 20H; 650c Alex AKX R2.0 TRI Alloy, 20H	Felt sealed alloy QR
R/HUB	Easton Vista SL, 24H	Alex AKX R2.0 Alloy, 24H; 650c Alex AKX R2.0 TRI Alloy, 24H	Felt sealed alloy QR, cassette, black
RIMS	Easton Vista SL with CNC Sidewalls 700 and 650	Alex AKX R2.0 w/CSW Braking Surface; 650c Alex AKX R2.0 TRI w/CSW Braking Surface	Alex R500 Double-Wall w/CNC sides
TIRES	Vittoria Diamante Pro-Light Folding 700 and 650x23c	Vittoria Rubino Slick Folding 700x23c; Vittoria Rubino 650x23c	Vittoria Zaffiro 700x23c; Felt Inertia 650x23c
SPOKES	Easton Vista SL Double Butted	Alex AKX R2.0, Round Spokes; 650c Alex AKX R2.0 TRI, Round Spokes	Stainless 14G
PEDALS			Aluminum Toe Clip and Strap Road Design

FRAME SETS SPECIFICATIONS

MODEL	F1	CA1	Z1
COLORS	Semi-matte Clear	Red	Semi-matte Clear
SIZES	700c x 50, 52, 54, 56, 58, 60	700c x 50, 52, 54, 56, 58, 60	700c x 51,54,56,58,61
FRAME	Felt UHC Ultra Hybrid Composite Modulus Modular Carbon Fiber Frame w/3K Finish. Forged Dropout w/replaceable CNC Hanger	Custom Butted Kinesium w/carbon seat stays, bulged seat tube, CNC'd head tube & BB shell, forged dropouts w/replaceable CNC Hanger	Felt UHC Ultra Hybrid Composite Modulus Modular Carbon Fiber Frame w/3K Finish. Forged Dropout w/replaceable CNC Hanger
FORK	Felt 1.1 UHC Ultra Blend Composite Modulus Modular Carbon Fiber Carbon Monocoque Design w/3K Finish, Carbon Blades, Dropouts, Crown & 1-1/8" Steerer w/Felt Compression Device	Reynolds Ouzo Comp High Modulus Carbon Monocoque Design w/3K Finish, Carbon Blades & 1-1/8" Steerer, Aluminum Crown & Dropouts w/Reynolds Compression Device	Felt 1.1 UHC Ultra Blend Composite Modulus Modular Carbon Fiber Carbon Monocoque Design w/3K Finish, Carbon Blades, Dropouts, Crown & 1-1/8" Steerer w/Felt Compression Device
HEADSET	FSA IS2 1-1/8" Integrated	FSA IS2 1-1/8" Integrated	FSA IS2 1-1/8" Integrated
SEAT POST	Ritchey WCS Carbon	Felt 1.1 Carbon Monocoque Design	Ritchey WCS Carbon
SEAT POST CLAMP	7075 CNC Aluminum w/Ti Bolt and Scandium Nutbar	7075 CNC Aluminum w/Ti Bolt and Scandium Nutbar	7075 CNC Aluminum w/Ti Bolt and Scandium Nutbar

MODEL	DA	B2	TK2
COLORS	Semi-matte Clear	Semi-matte Clear	Semi-matte Black
SIZES	650c x 48, 50; 700c x 52, 54, 56, 58, 60	650c x 48, 50; 700c x 52, 54, 56, 58, 60	700c x 52, 54, 56, 58, 60
FRAME	Felt 2007 Tri Specific UHC Ultra Blend Composite Modulus Modular Carbon Fiber Frame w/3K Finish. Integrated Fork and Stem. Forged Dropout w/replaceable CNC Hanger	Felt 2007 Tri Specific Superlight Ultra-High Modulus M305/5860 Modular Carbon Fiber Frame w/3KP Finish. Forged Dropout w/replaceable CNC Hanger	Custom Butted and Formed Super-light 7005 Aero Seat Tube, Semi-Aero Down Tube
FORK	Felt 3.1 UHC Ultra Blend Composite Modulus Modular Carbon Fiber Carbon Monocoque Design w/3K Finish, Carbon Blades, Dropouts, Crown & 1" Steerer w/Integrated Compression Device	Easton EC90 Aero Hi-modulus CNT Carbon Monocoque, Single lay-up design w/EMC Compression-molded Carbon Dropouts w/Easton Compression Device	Track Specific Felt Carbon Fiber w/1-1/8" Alloy Steerer
STEM	Felt 3.1 Felt Integrated Stem, Adjustable w/3 different size extensions	N/A	N/A
HEADSET	FSA IS 2A 1" Integrated	FSA IS 2A 1" Integrated	FSA IS2 1-1/8" Integrated
SEAT POST	Felt 3.1 Carbon Aero-Pro w/Double Offset	Felt 3.1 Carbon Aero-Pro w/Double Offset	Felt Alloy Micro Adjust
SEAT POST CLAMP	Integrated	Integrated	7075 CNC Aluminum w/Ti Bolt and Scandium Nutbar

All specifications subject to change without notice due to availability.

GEOMETRY

	SIZE	A: HA	B: SA	C: TTL (Horizontal)	D: TTL (C to C)	E: HEAD TUBE LENGTH	F: ST LENGTH (C to T)	G: ST LENGTH (C to C)	H: BB DROP	I: CHAIN STAY LENGTH	J: FRONT CENTER	K: WHEELBASE	L: RAKE	M: STANDOVER
F1	50	72	76	525	513	110	480	442	70	410	589.9	989.7	45	734
F2	52	73.5	76	535	525	110	500	462	70	410	588	987.8	45	746
F3	54	73	74.5	545	539.6	120	540	502	70	410	588.7	988.5	45	773
F4	56	73.5	73.5	560	555	140	560	522	70	410	588.3	988.1	43	792
	58	74	73.5	580	572.7	160	580	542	70	410	603.7	1003.6	43	811
	60	74	73.5	600	590.6	190	600	562	70	410	623.3	1023.4	43	834

	SIZE	A: HA	B: SA	C: TTL (Horizontal)	D: TTL (C to C)	E: HEAD TUBE LENGTH	F: ST LENGTH (C to T)	G: ST LENGTH (C to C)	H: BB DROP	I: CHAIN STAY LENGTH	J: FRONT CENTER	K: WHEELBASE	L: RAKE	M: STANDOVER
F55	50	72	76	525	514.3	110	480	440	70	405	590.3	985	45	730
F75	52	73	75.5	535	524.7	120	500	460	70	405	588.2	982.9	45	748
	54	73	74.5	545	538.5	130	540	500	70	410	589.2	989	45	776
	56	73.5	73.5	560	552.9	150	560	520	70	410	588.3	988.1	43	795
	58	74	73.5	580	572.8	170	580	540	70	410	603.6	1003.5	43	815
	60	74	73.5	600	590.5	200	600	560	70	410	623.4	1023.5	43	837
	63	74	73	605	596.8	220	630	590	70	410	622.4	1022.3	43	862

	SIZE	A: HA	B: SA	C: TTL (Horizontal)	D: TTL (C to C)	E: HEAD TUBE LENGTH	F: ST LENGTH (C to T)	G: ST LENGTH (C to C)	H: BB DROP	I: CHAIN STAY LENGTH	J: FRONT CENTER	K: WHEELBASE	L: RAKE	M: STANDOVER
F85	50	72	76	525	511.7	110	460	420	70	405	590.3	985	45	719
	52	73	75.5	535	521.5	120	480	440	70	405	588.2	983	45	735
	54	73	74.5	545	539.7	130	540	502	70	410	588.9	988.7	45	776
	56	73.5	73.5	560	553.1	150	560	522	70	410	588.3	988.1	43	795
	58	74	73.5	580	572.7	170	580	542	70	410	603.6	1003.5	43	814
	60	74	73.5	600	590.4	200	600	562	70	410	623.2	1023.2	43	837
	63	74	73	605	597.6	220	630	592	70	410	622.4	1022.39	43	861
650c	47	73	76	505	491.4	130	430	390	45	390	560.9	946.5	40	689

	SIZE	A: HA	B: SA	C: TTL (Horizontal)	D: TTL (C to C)	E: HEAD TUBE LENGTH	F: ST LENGTH (C to T)	G: ST LENGTH (C to C)	H: BB DROP	I: CHAIN STAY LENGTH	J: FRONT CENTER	K: WHEELBASE	L: RAKE	M: STANDOVER
F24	40	72	73.5	440	422.6	90	345	304.1	30	365	492.9	856	40	602

	SIZE	A: HA	B: SA	C: TT (Horizontal)	D: TT (C to C)	E: HEAD TUBE LENGTH	F: ST LENGTH (C to T)	G: ST LENGTH (C to C)	H: BB DROP	I: CHAIN STAY LENGTH	J: FRONT CENTER	K: WHEELBASE	L: RAKE	M: STANDOVER
Z25	51	72	74.5	525	506.7	140	470	429	70	417	583.8	990.7	50	729
Z35	54	72.5	74	545	525	160	500	447	70	417	595	1001.9	50	748
	56	72.5	73.5	560	538.6	180	520	467	70	417	605.1	1012.1	50	767
	58	72.5	73	575	552.6	200	540	487	70	417	614.9	1021.9	50	786
	61	72.5	73	595	573.3	220	570	517	70	417	634.9	1042.1	50	812

	SIZE	A: HA	B: SA	C: TT (Horizontal)	D: TT (C to C)	E: HEAD TUBE LENGTH	F: ST LENGTH (C to T)	G: ST LENGTH (C to C)	H: BB DROP	I: CHAIN STAY LENGTH	J: FRONT CENTER	K: WHEELBASE	L: RAKE	M: STANDOVER
Z65	51	72	74.5	525	507.3	140	470	430	70	415	583.5	988.3	50	723
Z70	54	72.5	74	545	526.9	160	500	455	70	415	594.6	999.5	50	744
	56	72.5	73.5	560	540.7	180	520	475	70	417	604.9	1011.9	50	764
	58	72.5	73	575	554.5	200	540	495	70	417	614.8	1021.9	50	783
	61	72.5	73	595	575.6	220	570	525	70	417	634.8	1042	50	809
650c	47	73	76	505	491.4	130	430	385	45	400	560.8	956.5	40	677

	SIZE	A: HA	B: SA	C: TT (Horizontal)	D: TT (C to C)	E: HEAD TUBE LENGTH	F: ST LENGTH (C to T)	G: ST LENGTH (C to C)	H: BB DROP	I: CHAIN STAY LENGTH	J: FRONT CENTER	K: WHEELBASE	L: RAKE	M: STANDOVER
Z80	51	72	74.5	525	507.1	140	470	425	70	415	583.5	988.3	50	719
	54	72.5	74	545	525.9	160	500	545	70	415	594.6	999.5	50	738
	56	72.5	73.5	560	539.6	180	520	465	70	417	604.9	1011.9	50	757
	58	72.5	73	575	553.3	200	540	485	70	417	614.8	1021.9	50	777
	61	72.5	73	595	574.2	220	570	515	70	417	634.8	1042	50	803

	SIZE	A: HA	B: SA	C: TT (Horizontal)	D: TT (C to C)	E: HEAD TUBE LENGTH	F: ST LENGTH (C to T)	G: ST LENGTH (C to C)	H: BB DROP	I: CHAIN STAY LENGTH	J: FRONT CENTER	K: WHEELBASE	L: RAKE	M: STANDOVER
Z90	51	72	74.5	525	507.1	130 non int	470	425	70	415	583.5	988.3	50	720
	54	72.5	74	545	525.9	150 non int	500	445	70	415	594.6	999.5	50	738
	56	72.5	73.5	560	539.5	170 non int	520	465	70	417	604.9	1011.9	50	757
	58	72.5	73	575	553.2	190 non int	540	485	70	417	614.8	1021.9	50	777
	61	72.5	73	595	574.1	210 non int	570	515	70	417	634.8	1042	50	803
650c	47	73	76	505	490.5	130	430	385	45	400	561.4	957.03	40	678

	SIZE	A: HA	B: SA	C: TT (Horizontal)	D: TT (C to C)	E: HEAD TUBE LENGTH	F: ST LENGTH (C to T)	G: ST LENGTH (C to C)	H: BB DROP	I: CHAIN STAY LENGTH	J: FRONT CENTER	K: WHEELBASE	L: RAKE	M: STANDOVER
FW2	47	71.5	75.3	515	500.8	120	470	426	70	415	584.1	988.9	50	716
FW3	49	71.5	74.5	525	508.9	145	490	446	70	415	588	992.9	50	737
	52	71.5	74.5	540	525.6	160	520	476	70	415	603.7	1008.7	50	762
650c	43	71.5	75.5	497	483.2	130	430	390	45	400	560.5	956.2	40	675

	SIZE	A: HA	B: SA	C: TT (Horizontal)	D: TT (C to C)	E: HEAD TUBE LENGTH	F: ST LENGTH (C to T)	G: ST LENGTH (C to C)	H: BB DROP	I: CHAIN STAY LENGTH	J: FRONT CENTER	K: WHEELBASE	L: RAKE	M: STANDOVER
FW4	47	71.5	75.3	515	499.5	120 non int	470	425	70	415	584.8	989.7	50	716
	49	71.5	74.5	525	507.5	145 non int	490	445	70	415	588.6	993.5	50	738
	52	71.5	74.5	540	523.6	160 non int	520	475	70	415	602.4	1007.4	50	762
650c	43	71.5	75.5	497	481.9	130 non int	430	385	45	400	561.6	957.1	40	676

	SIZE	A: HA	B1: SA (RR)	C1: TT (RR)	B2: SA (FWD)	C2: TT (FWD)	D: TT (C to C)	E: HEAD TUBE LENGTH	F: ST LENGTH (C to T)	G: ST LENGTH (C to C)	H: BB DROP	I: CHAIN STAY LENGTH	J: FRONT CENTER	K: WHEELBASE	L: RAKE	M: STANDOVER
DA / B2	52	72.5	77.6	520	79.7	503	520	100	520	455	70	405	589	984	40	753
	54	73	75.9	545	77.9	528	545	110	540	479	70	405	596	991	40	768
	56	73	76.3	557	78.2	540	557	125	560	505	70	405	612	1007	40	782
	58	73	76.7	581	78.5	564	581	145	580	508	70	405	640	1036	40	802
	60	73	77	593	78.8	576	593	160	600	508	70	405	657	1052	40	816
650c	48	72	78	490	80.1	473	490	115	480	405	45	385	562	947	35	720
	50	72.5	77.7	500	79.8	483	500	130	500	425	45	385	568	952	35	720

	SIZE	A: HA	B1: SA (RR)	C1: TT (RR)	B2: SA (FWD)	C2: TT (FWD)	D: TT (C to C)	E: HEAD TUBE LENGTH	F: ST LENGTH (C to T)	G: ST LENGTH (C to C)	H: BB DROP	I: CHAIN STAY LENGTH	J: FRONT CENTER	K: WHEELBASE	L: RAKE	M: STANDOVER
S22 / S32	52	72.5	77.6	520	79.7	503	520	100	520	455	70	405	589	984	40	753
	54	73	75.9	545	77.9	528	545	110	540	479	70	405	596	991	40	768
	56	73	76.3	557	78.2	540	557	125	560	505	70	405	612	1007	40	782
	58	73	76.7	581	78.5	564	581	145	580	508	70	405	640	1036	40	802
	60	73	77	593	78.8	576	593	160	600	508	70	405	657	1052	40	816
650c	48	72	78	490	80.1	473	490	115	480	405	45	385	562	947	35	720
	50	72.5	77.7	500	79.8	483	500	130	500	425	45	385	568	952	35	720

	SIZE	A: HA	B1: SA (RR)	C1: TT (RR)	D: TT (C to C)	E: HEAD TUBE LENGTH	F: ST LENGTH (C to T)	G: ST LENGTH (C to C)	H: BB DROP	I: CHAIN STAY LENGTH	J: FRONT CENTER	K: WHEELBASE	L: RAKE	M: STANDOVER
T43	50	72	76	517	510.7	110	520	472	70	405	580.3	975	45	752
	52	73	75.5	525	519.3	110	530	476	70	405	577.8	968.8	45	755
	54	73	74.5	541	534.1	120	540	490	70	405	582.7	978	45	765
	56	73	74	560	554	130	560	506	70	405	597.3	992.1	43	778
	58	73.5	74	580	574.4	150	580	526	70	405	613.1	1008	43	798
	60	73.5	74	601	594.3	170	600	545	70	405	633.2	1028.2	43	816

	SIZE	A: HA	B: SA	C: TTL (Horizontal)	D: TTL (C to C)	E: HEAD TUBE LENGTH	F: ST LENGTH (C to T)	G: ST LENGTH (C to C)	H: BB DROP	I: CHAIN STAY LENGTH	J: FRONT CENTER	K: WHEELBASE	L: RAKE	M: STANDOVER
F1X	49	71.5	75.5	520	505.5	110	490	420	55	420	588.7	1005.6	45	744
	51	71.5	74.3	530	514.5	120	510	440	55	420	588.3	1002.6	45	761
	53	72	73.8	540	524.9	130	530	460	55	420	589.5	1010.5	45	778
	55	72	73.5	560	544.2	150	550	480	55	420	607.1	1026.2	45	797
	57	72	73.5	580	564.1	170	570	500	55	420	627.6	1041.5	45	817
	59	72	73.5	600	583.9	190	590	520	55	420	648	1062.1	45	836

	SIZE	A: HA	B: SA	C: TTL (Horizontal)	D: TTL (C to C)	E: HEAD TUBE LENGTH	F: ST LENGTH (C to T)	G: ST LENGTH (C to C)	H: BB DROP	I: CHAIN STAY LENGTH	J: FRONT CENTER	K: WHEELBASE	L: RAKE	M: STANDOVER
TK2	52	75	74	520	510.3	110	520	448	45	389	526.9	917.4	25	759
	54	75	74	540	535.1	110	540	468	45	389	546.8	937.4	25	771
	56	75	74	560	555	130	560	488	45	389	566.4	957	25	790
	58	75	74	580	574.9	150	580	508	45	389	585.9	976.6	25	809
	60	75	74	600	594.9	170	600	528	45	389	605.5	996.3	25	828

F SERIES / T SERIES / F1X / TK2

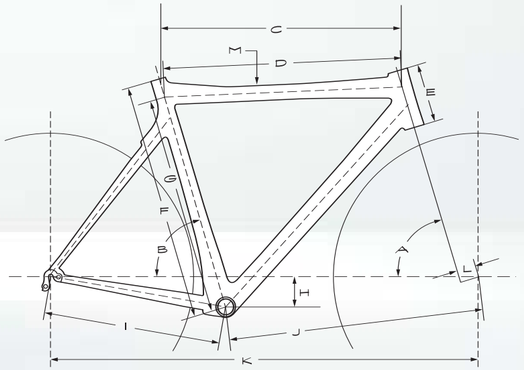

Z SERIES / FW SERIES

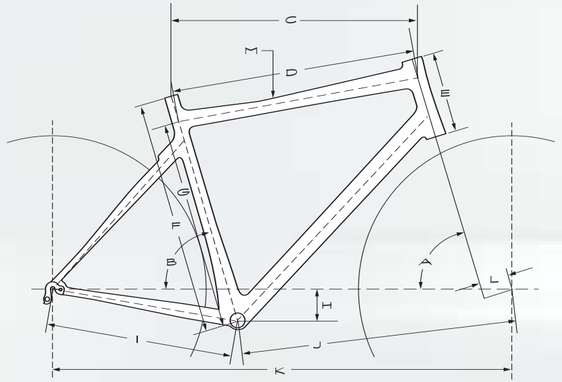

REFERENCE GUIDE

F / T / F1X / Z / FW SERIES

A = Head Tube Angle
B = Seat Tube Angle
C = Top Tube Length (Horiz.)
D = Top Tube Length (C - C)
E = Head Tube Length
F = Seat Tube Length (C - T)
G = Seat Tube Length (C - C)
H = BB Drop
I = Chain Stay Length
J = Front Center
K = Wheel Base
L = Fork Rake
M = Stand Over

(Horiz.) = Horizontal
(C - C) = Center to Center
(C - T) = Center to Top

DA / B2 / S SERIES

A = Head Tube Angle
B1 = Seat Tube Angle (Rear Position)
B2 = Seat Tube Angle (Forward Position)
C1 = Top Tube Length (Rear Position)
C2 = Top Tube Length (Forward Position)
E = Head Tube Length
F = Seat Tube Length (C - T)
H = BB Drop
I = Chain Stay Length
J = Front Center
K = Wheel Base
L = Fork Rake
M = Stand Over

(Horiz.) = Horizontal
(C - C) = Center to Center
(C - T) = Center to Top

DA / B2 / S SERIES

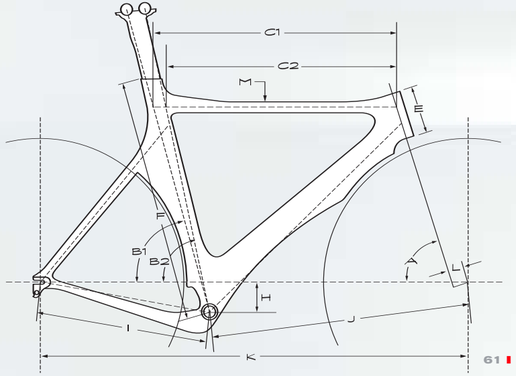

FELT EQUILINK SUSPENSION SYSTEM

THE CHALLENGE.

When Felt first set out to develop our new full suspension design platform, we were more than aware of the challenges that lay ahead. After all, fresh concepts are difficult to prove, very expensive to develop, and existing patents are fiercely protected. We knew no one would take us seriously if we just licensed existing technology, so a me-too product was never an option.

We started with a clean sheet of paper.

In order to succeed, we knew we would need to design a package comprised of a very diverse blend of attributes. Expectations riders have can seem contradicting at times: They want more travel and greater durability, yet they want lighter weight. They want their suspension to remain active at all times, but they will not sacrifice any measure of efficiency. They want it to be predictable and consistent throughout the range of travel, and regardless of gear selection. They want no bob, no pedal kickback, easy set-up, and maximum tune-ability. And of course, riders want all of these qualities to be wrapped up in a design that is not only easy to understand, but simple to service.

Needless to say, our engineering team had their work cut out for them.

THE GOAL.

While there is no shortage of suspension concepts on the market meeting some of (and a varied mix of) these demands, we could not find a single system that met them all. Our goal quickly became to develop the complete full-suspension Experience for our customers. This Experience for the rider would be all-inclusive; designed around achieving a perfect balance of all of the qualities they dream for their bikes to possess. In short time, we realized that, from the long list of rider demands, all of the qualities essentially pointed to the same two basic elements:

FAST AND SIMPLE.

These two elements would become the primary driving force for the Experience that we would one day deliver.

Additionally, we knew we needed a suspension technology that could be applied to any type of bicycle; from XC short travel racers to Endurance and All-Mountain models, to longer-travel Freeride and DH machines.

Luckily, we had no shortage of desire to make it happen.

EQUILINK SUSPENSION

THE EQUILINK SOLUTION.

After nearly three years of extensive testing, evaluation, and R&D, a revolutionary and patented suspension technology named Equilink is born. The magic of the system lies within the red Equillink positioned vertically behind the seat tube. This innovative yet amazingly simple link counteracts weight transfer on its own, allowing the drivetrain to do only what it was meant to do; propel the rider forward. By equalizing the forces of acceleration and rider input, the suspension remains open and active while moving you forward with the greatest efficiency.

FAST - Unrivaled efficiency. No bob. No pedal kickback. Always predictable and consistent. Active in and out of the saddle. Sensitive to the smallest of bumps.

SIMPLE -Tunability is an option – not a requirement. No hard-to-find sweet spot. Whether it's initial set-up, on the trail adjustment, pro-tuning, and servicing, simplicity is what Equilink delivers.

Finally, a single suspension design platform that possesses it all, and one that can be applied to any riding discipline. Equilink technology has first been employed on our all-new Virtue series of high-performance Endurance/All-Mountain models delivering over 5" (130mm) of amazingly fluid and ultra-efficient travel. And you can be certain than more applications are on the way.

REVOLUTIONARY. PATENTED. FAST & SIMPLE.
– THE EQUILINK EXPERIENCE.

THE FUNCTION, SIMPLY EXPLAINED

Note the red Equilink positioned behind the seat tube. This equalizing link counteracts weight transfer on its own, so that the drivetrain doesn't have to.

As you pedal, the red link automatically pulls down on the upper horizontal link, which instantly negates and equalizes weight transfer. The harder you pedal (the more weight transfer you initiate), the Equilink simply mirrors the effort, keeping a constant state of equalization.

By allowing the drivetrain to do what is was meant to do (move you forward), we are able to maximize pedaling efficiency while allowing the suspension to remain equalized, and ultra-compliant as it moves freely over even the smallest bumps.

EQUILINK = FAST

1: LIGHTWEIGHT

Equilink was designed to be virtually limitless in regards to frame design. You will see no tubing interrupted with pivots (which need to be beefed up to handle the loads), no need for massive gusseting, no need for oversized or complicated tubing formations. The Equilink system is rather compact in itself, enabling the frame to utilize very simple, lightweight, traditional, no-nonsense tubing, as exemplified on our Virtue series of endurance race models.

2 : COMFORT

A comfortable rider can focus all his/her energy on pedaling, rather than the distraction of constantly shifting/adjusting the body position due to terrain input.

3 : ENDURANCE

Over time, efficient shock absorption conserves energy, increasing power output.

REDUCED WEIGHT, ADDED COMFORT, AND ENHANCED ENDURANCE ALL TRANSLATE TO INCREASED SPEED OVERALL.

EQUILINK = SIMPLE

1 : SET-UP

At Felt we believe that riders should be able to set up their bike quickly, easily, as they like, and without a narrow window for error. Many suspension bikes today require complicated, time-consuming, and very specific setup procedures. Among them are a very precise air pressure/sag setting, limited damping settings (e.g. firm, firmer or lockout), inertia valve settings, etc. We believe a rider should not suffer a poor ride or a bad day just because he/she was off by a few PSI or a small click of a dial.

2 : NO SWEET SPOT

Some suspension bikes are known for their "sweet spot" when it comes to how the suspension performs under certain conditions and certain settings. Obviously, finding and adjusting your bike to find this sweet spot can be challenging and time-consuming. How nice would it be to have a bike with a sweet spot throughout the entire range of travel? So, if you happen to be "off" by a few PSI, you don't end up with bobbing or pedal kickback; you just end up with a little softer or firmer ride.

3 : TUNE-ABILITY

We believe that tune-ability should be an option - not a requirement. If a rider wants to try out a platform valve shock, it's no problem. If someone feels they just have to have a lockout, feel free. While the Equilink system was designed to offer the utmost in efficiency without these types of shocks, we recognize that they can indeed change the ride characteristics and that some riders may like to experiment with what these types of shocks can offer.

4 : NO SPECIAL SHOCK

Some suspension bikes are designed to be dependent on one type of shock, made by one shock maker, tailored to a specific rider weight/size. This usually comes at a high price and inconvenience, assuming you are able to get your hands on one in your area. The Equilink system, on the other hand, was designed to accept any brand of shock, around conventional shock lengths, without requiring specific internal factory settings.

WHEN IT COMES TO INITIAL SET-UP, ON THE TRAIL ADJUSTMENT, PRO-TUNING, AND SERVICING, SIMPLICITY WAS ALWAYS AN ABSOLUTE REQUIREMENT FOR THE EQUILINK SYSTEM.

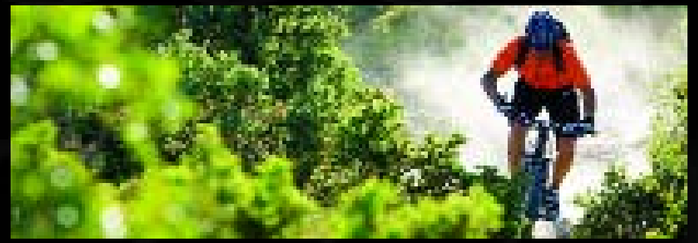

EQUILINK SUSPENSION

EQUILINK = EFFICIENT SUSPENSION

1 : NO BOB

Equilink is the first bicycle suspension system to effectively eliminate the use of the drivetrain as the primary mode of counteracting weight transfer (the cause of bobbing). Equilink was specifically designed to neutralize the effects of weight transfer without the direct use of direct chain force, achieving a perfect state of suspension "equalization". By keeping the drivetrain independent of the suspension, it is allowed to perform the job it was solely intended: to propel the bicycle and rider forward.

2 : PREDICTABLE & CONSISTENT

On most bikes, the level of anti-squat (or anti-bob) can vary greatly, depending on which gear combination you are in (because the amount of leverage the chain has over the pivot changes along with the gear selection). For example, the large chainring/small cog will produce very different results than the small chainring/large cog combination (and one can imagine the many possibilities in between). The typical result is suspension that is inconsistent and unpredictable. With the Felt system, the red Equilink is employed to do the work normally carried out by the chain itself, resulting in stable and consistent anti-bob characteristics in any gear combination, at any speed.

3 : NO PEDAL KICKBACK

Near vertical axle path ensures smooth pedaling circles regardless of gear selection and terrain input.

ALL THREE OF THESE FEATURES CONTRIBUTE TO THE AMAZING EFFICIENCY OF THE EQUILINK SYSTEM.

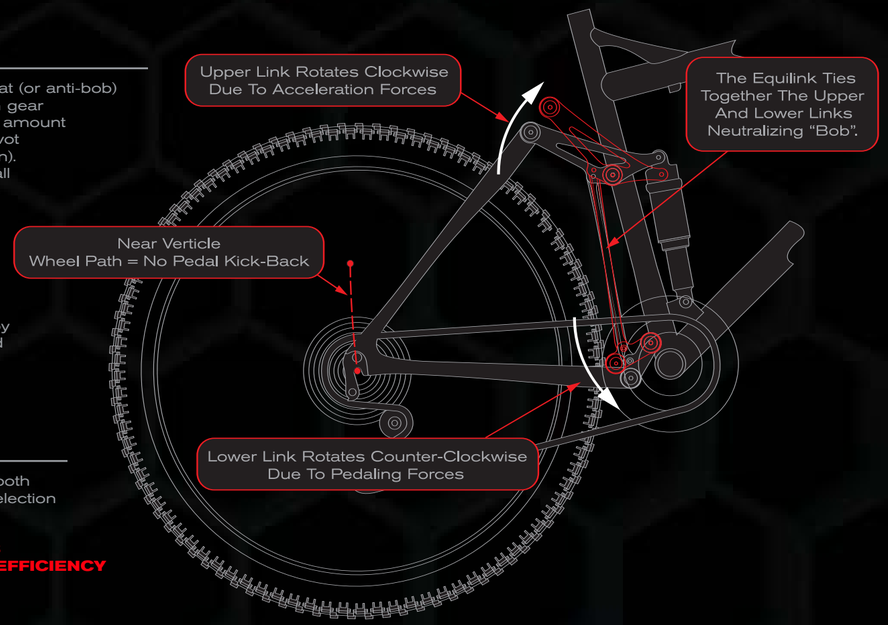

EQUILINK = ACTIVE SUSPENSION

1 : IN/OUT OF THE SADDLE

Equilink is not prone to shifts in spring rate, whether the rider is seated or standing. Equilink remains active when sprinting out of the saddle, hanging over the back on a downhill, or seated on a long, slow uphill grind.

2 : SMALL BUMP SENSITIVITY

The surge in popularity of platform damping or brain shocks reflects the amount of inefficient suspension designs on the market today, especially when it comes to small bump sensitivity. Platform shocks are often employed to mask inherent design inefficiencies. The problem is: When you over-damp a shock to hide rider-induced shock movement, you can also stop the shock from reacting to smaller terrain-induced movement. At Felt, we believe that suspension should be active all the time, to pick up the small as much as the big, enhancing comfort, as well as traction. We believe platform valving should be used ONLY to smooth out unwanted shock movement due to inconsistent (jerky) pedaling - not to counteract bob caused by rider weight transfer.

A TRULY ACTIVE SUSPENSION DESIGN IS ONE THAT WORKS EQUALLY IN OR OUT OF THE SADDLE, POINTED UP OR POINTED DOWN, AND SENSITIVE TO THE TINY STUFF AS MUCH AS THE BIGGER HITS.

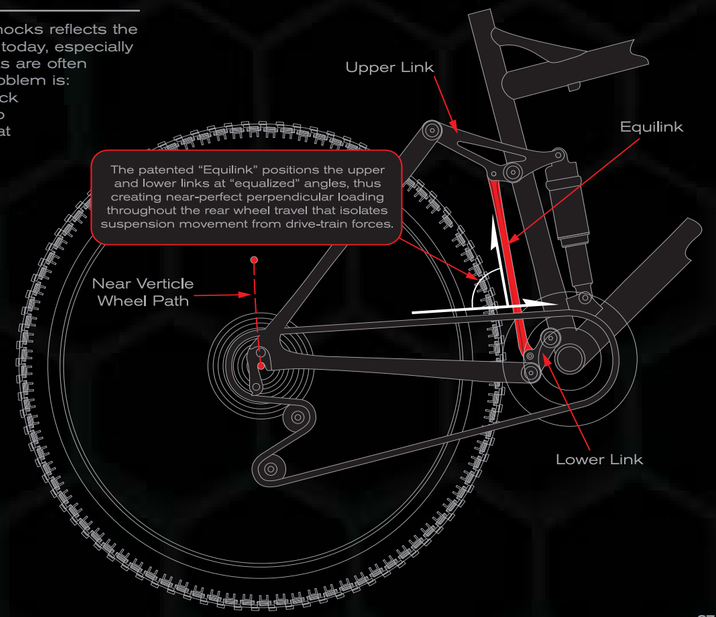

EQUILINK SUSPENSION

FELT VIRTUE SERIES

2007 marks a turning point in full suspension technology, and we believe our innovative Virtue design is destined to hold a unique place in bicycle history. Not only is the all-new Virtue series the first application to utilize our revolutionary and patented Equilink suspension technology, but it also delivers an unbeatable combination of performance traits while employing the most cutting-edge materials and manufacturing processes of our time.

THE CHALLENGE

Nearly three years ago, when our engineering team first set out to design our dream bike, we knew exactly what riders were searching for: The one bike that has it all...

*Lightweight, efficient and fast enough to win races on.
*Seemingly endless travel
*Durable enough to handle the rigors of every day trail abuse.
*Remains fluid and active over the smallest bumps - without sacrificing any measure of efficiency.
*Predictable and consistent throughout the range of travel and independent of gear selection.
*No bob, no pedal kickback, easy set-up, and maximum tune-ability.

And of course, they wanted all of these qualities to be wrapped up in a design that is easy to understand and simple to service.

THE SOLUTION

With well over two years of extensive research, development, testing and evaluation, the Felt engineering team has now proven it can indeed deliver the entire package. And they have done so in the form of all-new Virtue, featuring Felt-exclusive Equilink technology.

Seamus McGrath on the Virtue One.

PERFORMANCE, GEOMETRY AND THE RIDE

All four Virtue models are exceptionally lightweight considering the generous 5 inches (130mm) of travel they deliver, not to mention their ability to handle day-to-day all-mountain abuse. However, there are a few key differences within the model lineup. The Virtue 1 & 2 feature ultra-lightweight front triangles, race-oriented geometry, and longer top tubes. The Virtue 3 & 4 have larger, stiffer down tubes and seat tubes, combined with slightly shorter top tube lengths to achieve more of an everyday trail-riding demeanor. Whether you need a high performance race machine or a do-all trail bike, there is a model within the Virtue lineup that meets your need.

In the spirit of what Equilink suspension was designed to accomplish, the Virtue series embodies those two all-inclusive, key elements we envisioned our dream bikes to possess: Unrivaled speed and unprecedented simplicity.

VIRTUE FRAME SPECIFICS

FRONT TRIANGLE

Since the Virtue was designed to be incredibly fast and absolutely race-worthy, being lightweight was a top priority. One of the many beauties of the Equilink system is its inherent compact size and minimal weight. Since the key suspension members (links) are contained just behind the seat tube, there's no need to use primitive, heavy-duty tubing to house pivots on the main tubes. You will not see any interrupted tubing, monstrous gusseting, or over-designed monocoque applications. What you will see is a sophisticated yet bullet-proof 7000 series aluminum front triangle. The top tube utilizes the latest in hydroform technology, allowing us to manipulate and strengthen tubing without adding unnecessary weight. A Felt proprietary Superlight double-butted downtube is met by an internally and externally-relieved hourglass head tube up top, and at the bottom by a two-piece, welded BB/lower pivot clevis, which has been machined from the inside out, shedding significant weight. The Virtue front triangle sets the standard by achieving the ideal balance of lightweight refinement and long-term durability.

REAR TRIANGLE

When our engineers needed to select the ideal material for the rear end, carbon fiber was the perfect and obvious choice. Since carbon naturally dampens vibration, there was no better place to use it than on the section taking the brunt of the impact and abuse. On a typical bicycle frame, the seatstays and chainstays usually have the heaviest wall thickness of any frame tubes. Because of this fact, we were able to specify a carbon fiber thickness which provided all the off-road durability needed, while meeting our weight and flexibility requirements simultaneously. Carbon fiber was ideal for the Virtue suspension design since it could be laid up in the mold precisely how we wanted, to provide bump-absorbing vertical compliance while maintaining lateral stiffness for efficient power transfer.

SHOCKS

All Virtue models feature lightweight air sprung shocks. The Virtue 1 & 2 are specified with a Fox Float RP23 with 3-Position Pro-Pedal for maximum tune-ability. The Virtue 3 also benefits from Fox's Pro-Pedal, but in non-adjustable form. Even the Virtue 4 gets platform damping from Answer's lightweight Radium R model. The Virtue frame was designed to accept any brand of shock, around conventional shock lengths, without requiring specific internal factory settings. The Equilink suspension system was designed to offer the utmost in efficiency without requiring platform-valved shocks to mask design deficiencies (suspension-induced bobbing). However, we do recognize that platform valving can be used to smooth out unwanted rider-induced shock movement such as choppy or inconsistent pedaling stroke. At Felt, we believe that shock specification and tune-ability should be a choice - not a requirement.

LINKS & PIVOTS

The Virtue features cold-forged links for strength and are CNC-machined for lightweight refinement. Identical and commonly-available sealed cartridge bearings are specified at all pivots, contributing to the simplicity of the Equilink system.

FOR MORE IN-DEPTH INFORMATION ABOUT EQUILINK TECHNOLOGY, PLEASE REFER TO THE PREVIOUS EQUILINK TECHNOLOGY SECTION.

VIRTUE TECHNICAL DESIGN FEATURES

Tubular Aluminum front triangle Construction

Modular Carbon / Alloy Swingarm Construction

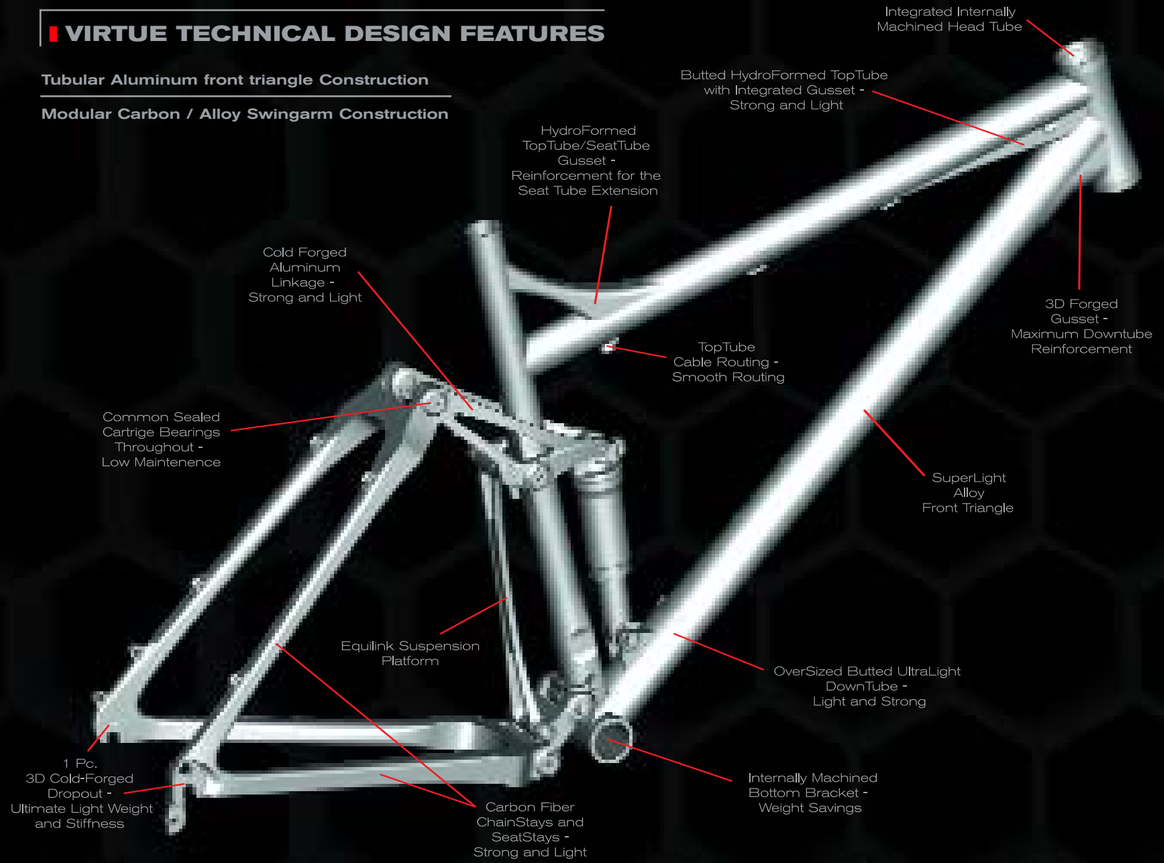

VIRTUE ONE

SIZES (in) : S (15.5) / M (17.5) / L (19.5) / XL (21.5)

COLOR : Matte Black

WEIGHT : 25.68 lbs.

FEATURES OVER VIRTUE TWO :

Fox Fork, Full XTR Group, CrossMax Wheelset, Easton Bar/Stem/Post, Juicy Ultimate Carbon Brakes

FRAME :

Virtue Lightweight Endurance Full Suspension Featuring Equilink, 130mm Travel, 7000 Series DB Aluminum w/Hydroform TT, Carbon Fiber Sub-Frame, Fully Integrated Head Tube

FORK / SHOCK:

Fox Talas RLC, 140/120/100mm Travel Adjust, Air Spring, FIT Damping, Rebound & Comp. Adjust, Push Button Lockout; Fox Float RP23 Air, Pro Pedal 3-Position Lever, Rebound Adjust

DRIVETRAIN :

Shimano XTR RD, FD, Crankset, Rapid Fire Shifters, Cassette, Dura-Ace Chain

WHEELSET :

Mavic CrossMax SL Disc Wheelset

COMPONENTS :

Avid Juicy Ultimate Carbon Disc Brakes 180mm FT/160mm RR Rotors, Selle Italia SLR Ti Saddle, Easton Monkeylite Carbon Bar, Easton EA 70 Stem & Seatpost, Maxxis Ignitor 2.1 UST Kevlar Tires, 7075/Scandium/Titanium Seatclamp

VIRTUE TWO

SIZES (in) : S (15.5) / M (17.5) / L (19.5) / XL (21.5)

COLOR : Brushed Silver Aluminum

WEIGHT : 27.25 lbs.

FEATURES OVER VIRTUE THREE :

Fork: Travel Adjust & Remote Lockout, XTR/XT Group, Mavic Wheelset, Avid Juicy 7 Brakes.

FRAME :

Virtue Lightweight Endurance Full Suspension Featuring Equilink, 130mm Travel, 7000 Series DB Aluminum w/Hydroform TT, Carbon Fiber Sub-Frame, Fully Integrated Head Tube

FORK / SHOCK:

RockShox Revelation 409 U-Turn Air w/PopLoc Remote, 130-100mm Travel, Motion Control Damping, 32mm Aluminum Stanchions, Alloy Steerer, Rebound & Compression Adjust; Fox Float RP23 Air, Pro Pedal 3-Position Lever, Rebound Adjust

DRIVETRAIN :

Shimano XTR RD, XT FD, XT Rapid Fire Shifters, XT Hollowtech II Crankset, XT Cassette

WHEELSET :

Mavic Crossride Disc-Specific Wheelset

COMPONENTS :

Avid Juicy 7 Hydraulic Disc Brakes 180mm FT/160mm RR Rotors, Sram Chain, Felt Façade Dual Density Saddle, Maxxis Ignitor 2.1 Folding Kevlar Tires, Butted Aluminum Riser Bar

VIRTUE THREE

SIZES (in) : S (15.5) / M (17.5) / L (19.5) / XL (21.5)

COLOR : Matte Red

WEIGHT : 28.1 lbs.

FEATURES OVER VIRTUE FOUR :

Fork: Dual Air Spring & Alloy Steerer, LX Cranks, Deore Brakes, Mavic Rims

FRAME :

Virtue Endurance/All-Mountain Full Suspension Featuring Equilink, 130mm Travel, 7000 Series DB Aluminum w/Hydroform TT, Oversize DT & ST, Carbon Fiber Sub-Frame, Fully Integrated Head Tube

FORK / SHOCK :

RockShox Revelation 409 Dual Air 130mm Travel, Motion Control, 32mm Aluminum Stanchions, Butted Alloy Steerer, Rebound & Compression Adjust; Fox Float RP2 Air Pro Pedal, Rebound Adjust

DRIVETRAIN :

Deore XT Rear Derailleur, LX Front Derailleur, LX Hollowtech II Crankset, Deore Rapid Fire Shifters, HG-50 Cassette

WHEELSET :

Mavic XC-117 Double-Wall Rims, Shimano RM65 Centerlock Hubs, Stainless Steel 15G Spokes

COMPONENTS :

Deore Hydraulic Disc Brakes 180mm FT/160mm RR Rotors, Sram Chain, Felt Façade Dual Density Saddle, Maxxis Ignitor 2.1 Folding Kevlar Tires, Cold-Forged+CNC Stem

VIRTUE FOUR

SIZES (in) : S (15.5) / M (17.5) / L (19.5) / XL (21.5)

COLOR : Matte Charcoal

WEIGHT : 30.0 lbs.

FRAME :

Virtue Endurance/All-Mountain Full Suspension Featuring Equilink, 130mm Travel, 7000 Series DB Aluminum w/Hydroform TT, Oversize DT & ST, Carbon Fiber Sub-Frame, Fully Integrated Head Tube

FORK / SHOCK:

RockShox Recon 351 U-Turn Lockout, 130/85mm Travel Adjust, Motion Control Damping, 32mm Aluminum Stanchions, Rebound Adjust; Answer Radium R Air Spring, Platform Plus Damping, Rebound Adjust

DRIVETRAIN :

Deore XT Rear Derailleur, LX Front Derailleur, Deore Rapid Fire Shifters, HG-50 Cassette

WHEELSET :

WTB SX-24 Double-Wall Rims, Shimano M475 6-Bolt Hubs, Stainless Steel 15G Spokes

COMPONENTS :

Truvativ Firex 3.1 2-Piece Crank w/External BB, Sram Chain, Hayes Sole Hydraulic Disc Brakes 180mm FT/160mm RR Rotors, Butted Aluminum Handlebar, Felt Façade Dual Density Saddle, Maxxis Ignitor 2.1 Folding Kevlar Tires

FELT RXC SERIES

RXC equals Race Cross Country, and there is simply no better way to describe what these machines were designed to do. When it comes to meeting the demands of serious XC and Xterra racers, Felt RXC models set the standard for performance.

At Felt, we believe that when it comes to XC racing frames, the best possible balance of weight, strength, comfort, energy efficiency, and off-road durability is achieved by using our carbon-plus-aluminum and carbon-plus-Kinesium design platforms (Kinesium is an even lighter aluminum-based material). Our goal is to extract the ideal characteristics from two different materials and blend them together into one seamless, finished product. We have taken our years of traditional tube forming experience and blended in today's carbon fiber technology precisely where both can offer the greatest benefit to the racer.

The extent at which our custom Superlite Alumium and Kinesium tubing are manipulated is beyond imagination. Both external and internal butting techniques are employed to reduce weight, while exaggerated tapers and muscular flares contribute to the RXC's amazing stiffness. Beyond that, the "Felt feel" of endurance-enhancing compliance is designed into each frame in a way that only years of forming experience and know-how can deliver. So how does carbon fiber come into play? Since the seatstays are pointed directly toward the rider, most of the terrain input is transferred from the rear wheel axle straight through the rider's body. With carbon fiber's inherent vibration damping characteristics, there is no better place to utilize the material than the seat stays.

RXC's are designed around true race requirements: A long, sloping top tube, short rear end, and quick, aggressive geometry all contribute to their racing intentions. Built up from components carefully selected to maximize XC performance and minimize weight, you'll find that only the best brand names such as Shimano, Fox, RockShox, Mavic, and Maxxis will do.

Ridden by the likes of Seamus McGrath, medalist in the 2006 Commonwealth games, as well as three-time National Champion (including 2006) and 2005 World Champion Jamie Whitmore, RXC's have delivered more than their fair share of podium finishes.

WHETHER YOU'RE AN XTERRA RACER, A CROSS-COUNTRY WEIGHT FANATIC, OR JUST A BELIEVER IN PERFORMANCE THROUGH TECHNOLOGY, FELT DELIVERS. SUPERLIGHT, COMPLIANT, AND BUILT FOR SPEED, RXC'S OUTPERFORM EVEN OUR OWN EXPECTATIONS.

Seamus McGrath racing on the RXC PRO at the 2006 Mt. Saint-Anne UCI World Cup.

RXC TECHNICAL DESIGN FEATURES

Modular Alloy / Carbon Fiber Construction

XC Race Specific Frame Geometry

RXC Pro

SIZES (in) : 15.5 / 17.5 / 19.5 / 21.5"

COLOR : White Gold

WEIGHT : 23.75 lbs.

FEATURES OVER RXC Elite :

Fox Fork, XTR/XT Group, Mavic Wheelset, Avid Juicy 7 Brakes, Fully Integrated 45 Degree Head tube/Headset

FRAME :

RXC Superlight Butted 7000 Series Aluminum w/Carbon Fiber Seatstays, Fully Integrated HT, Cold-Forged Dropouts

FORK :

Fox F80RL, 80mm Travel, Threshold Adjust & Lockout, 32mm Aluminum Stanchions

DRIVETRAIN :

Shimano XTR RD, XT FD, XT Rapid Fire Shifters, XT Hollowtech II Crankset, XT Cassette

WHEELSET :

Mavic Crossride Disc-Specific Wheelset

COMPONENTS :

Avid Juicy 7 Hydraulic Disc Brakes 160mm Rotors, Sram Chain, Felt Façade Dual Density Saddle, Maxxis Ignitor 2.1 Folding Kevlar Tires, Butted Aluminum Flatbar

RXC Elite

SIZES (in) : 15.5 / 17.5 / 19.5 / 21.5"

COLOR : Steel Blue

WEIGHT : 25.0 lbs.

FRAME :

RXC Superlight Butted 7000 Series Aluminum w/Carbon Fiber Seatstays, Semi-Integrated HT, Cold-Forged Dropouts

FORK :

RockShox Reba SL, Motion Control Damping w/Lockout, Dual Air Spring, 100/85mm All-Travel Adjust, 32mm 7000 Series Aluminum Stanchions, Rebound Adjust

DRIVETRAIN :

Shimano Deore XT Rear Derailleur, Deore LX Rapid Fire Shifters & Front Derailleur, HG-50 Cassette

WHEELSET :

Mavic XC-117 Double-Wall Rims, Shimano RM65 Centerlock Hubs, Stainless Steel 15G Spokes

COMPONENTS :

Truvativ Firex 3.1 2-Piece Crank w/External BB, Sram Chain, Deore Hydraulic Disc Brakes 160mm Rotors, Felt Façade Dual Density Saddle, Maxxis Ignitor 2.1 Folding Kevlar Tires

FELT Q SERIES

The Felt Q series captures the original and sometimes forgotten essence of what mountain biking is supposed to be: A Quest for adventure.

While our Q's are designed for everyday cross country performance, the technology inside the frame is nothing short of extraordinary. All Q's use premium 6061 aluminum tubing, and share state-of-the-art forming technologies with their RXC and SHOT siblings. The Felt proprietary hydroformed top tube, externally butted seat tube, and oversized/flared down tube name just a few. The internally-machined, hourglass-shaped, semi-integrated head tubes and 3D cold-forged dropouts exhibit the fact that no technical detail goes unchecked by our in-house engineering team.

When it comes to the ride and handling, Q frame geometry can be described as less aggressive and a bit more upright, providing greater comfort in all-condition type riding. The seat tube is oversized to 34.9mm at the BB shell for max stiffness, yet tapers back at the top, providing for a more flexible and compliant 27.2mm seatpost. Combined, these features give Q frames their lightweight and comfortable feel, as well as exceptional power transfer and climbing ability.

Every Q model within our line features disc brakes for max stopping power, Shimano drivetrains for dependable shifting, and the latest from RockShox in fork suspension technology.

WITH YOUR QUEST FOR PERFORMANCE ALREADY TAKEN CARE OF, YOU CAN REST ASSURED YOUR Q WILL HANDLE WHATEVER ADVENTURE YOU BRING ITS WAY.

Ash Thomas of Australia racing a Q.

Q SERIES TECHNICAL DESIGN FEATURES

Tubular Aluminum Construction

XC Specific Frame Geometry

Q920

SIZES (in) : 13.5 / 15.5 / 17.5 / 19.5 / 21.5"

COLOR : Matte Black

FEATURES OVER Q720 :

Fork: Motion Control Air Spring & 32mm Stanchions, LX Shifters & FD, Mavic Rims, Firex 2-Piece Crank w/External BB, Maxxis Tires, Superlight Alloy Pedals

FRAME :

Q Series DB 6061 Aluminum, Hydroform Top Tube, Internally & Externally Butted Tubing, Monostay Design, Semi-Integrated HT, 3D Forged Dropouts

FORK :

RockShox Tora 318 Air Motion Control Damping w/Lockout, 130/100/80mm All-Travel Adjust, 32mm Cr-Mo Stanchions, Rebound Adjust

DRIVETRAIN :

Shimano Deore XT Rear Derailleur, Deore LX Rapid Fire Shifters & Front Derailleur, HG-50 Cassette

WHEELSET :

Mavic XC-117 Double-Wall Rims, Shimano RM65 Centerlock Hubs, Stainless Steel 15G Spokes

COMPONENTS :

Truvativ Firex 3.1 2-Piece Crank w/External BB, Sram Chain, Deore Hydraulic Disc Brakes 180mm FT/160mm RR Rotors, Maxxis Ignitor 2.1 Folding Kevlar Tires, Cold-Forged +CNC Stem

Q720

SIZES (in) : 13.5 / 15.5 / 17.5 / 19.5 / 21.5"

COLOR : Liquid Grey

FEATURES OVER Q620 :

Fork Lockout & Cr-Mo Stanchions; 27-Speed Drivetrain, Hydraulic Brakes, Aluminum Handlebar, Eyeleted Rims

FRAME :

Q Series 6061 Aluminum, Hydroform Top Tube, Externally Butted Tubing, Monostay Design, Semi-Integrated HT, 3D Forged Dropouts

FORK :

RockShox Dart 2 Turnkey Lockout, 100mm Travel Aluminum Lowers/Crown, 28mm Cr-Mo Stanchions, Preload Adjust

DRIVETRAIN :

Shimano 27 Speed, Deore XT Rear Derailleur, Deore Rapid Fire Shifters & Front Derailleur, HG-50 Cassette

WHEELSET :

WTB SX-24 Double-Wall Eyeleted Rims, Shimano M475 6-Bolt Hubs, Stainless Steel 15G Spokes

COMPONENTS :

Truvativ ISO-Flow Crank, Sram Chain, Hayes Sole Hydraulic Disc Brakes 180mm FT/160mm RR Rotors, Butted Aluminum Handlebar, Felt Façade Dual Density Saddle

Q620

SIZES (in) : 13.5 / 15.5 / 17.5 / 19.5 / 21.5"

COLOR : Matte Red

FRAME :

Q Series 6061 Aluminum, Hydroform Top Tube, Externally Butted Tubing, Monostay Design, Semi-Integrated HT, 3D Forged Dropouts

FORK :

RockShox Dart 1, 100mm Travel Aluminum Lowers/Crown, 28mm Stanchions, Preload Adjust

DRIVETRAIN :

Shimano 24 Speed, Deore Rear Derailleur, EZ Fire Plus Shifters, HG-40 Cassette

WHEELSET :

WTB SX-24 Double-Wall Rims, Alivio Centerlock Hubs, Stainless Steel 15G Spokes

COMPONENTS :

Truvativ X-Flow Crank, Alivio Mechanical Disc Brakes 180mm FT/160mm RR Rotors, Semi-Integrated Headset, Felt Façade Dual Density Saddle, Forged Aluminum Stem

FELT SHOT SERIES

When we set out to develop our exclusive SHOT line of dirt-jump and freeride hardtail models, we had one simple goal in mind: Make the real deal.

There is no shortage of wannabe dirt jump/freeride bikes on the market today. Many lack ingenuity and neglect critical discipline-specific design requirements in order to streamline production and minimize cost. At Felt, we know if you don't connect with real riders and identify their unique needs, you'll fall short on performance and compromise durability. While some brands simply disguise everyday mountain bikes with puffed-up tubing and aggressive paint jobs, Felt has strived to offer the market exactly the right bike, with the right features, for varied disciplines of riding. Whether it's the dirt jump-specific Jump Shot, or the freeride Straight Shot and Double-Shot, what they all have in common is a ton of design detail, the ability to perform, and the strength to handle serious abuse.

Utilizing the latest in hydroform tubing technology, SHOT frames are as aggressive and tough as their looks imply. Hydroforming allows for unusual and complex external shapes while utilizing premium double-butted technology internally. This results in lightweight yet remarkably strong tubing, without requiring additional gusseting or reinforcement. 6061 aluminum is the material of choice, and each frame tube is customized exclusively for Felt and tailored to its intended purpose. Beefed for strength only where necessary, and ranging from 4 to 4.5 lbs, our Shot frames remain considerably lightweight for their intended purposes. Like all Felt frames, our Shots possess a certain refinement that cannot be found elsewhere.

While the Jump Shot is dirt jump-specific with its down-sized BMX style geometry and single gear, the Straight Shot and Double Shot feature multiple speeds and longer top tubes; enabling you to climb up what you are about to conquer. Built up with real freeride and dirt jump-worthy components from brands like Truvativ, Marzocchi, RST, WTB, and Hayes, whichever SHOT model suits your need best, it will handle whatever abuse you can dish out.

ATTENTION TO DETAIL

One exceptional example of design detail can be found on the Jump Shot frame and its custom eccentric bottom bracket set. Since dirt-jumpers often choose a single-speed setup, many brands simply provide a BMX-style horizontal dropout so that chain tension can be achieved. For most people, this seemingly straightforward task can become quite a challenge once adjustable disc-brake caliper mounts are introduced into the equation, and complicated even further when the rider decides he needs a different gear combination. With the Felt eccentric BB design, the rear wheel axle is mounted in one location, just like a normal MTB dropout, so the disc brakes line up no matter what gear combo you run. No clumsy pulleys or chain tension gadgetry required. Instead, the eccentric BB is simply rotated until chain slack is gone, and is then tightened. It's that simple. This is just one example of the thought and effort that has gone into every SHOT frame and bicycle.

David Cachon on the Straight Shot.

SHOT TECHNICAL DESIGN FEATURES

Tubular Aluminum Construction

Dirt / Freeride Specific Frame Geometry

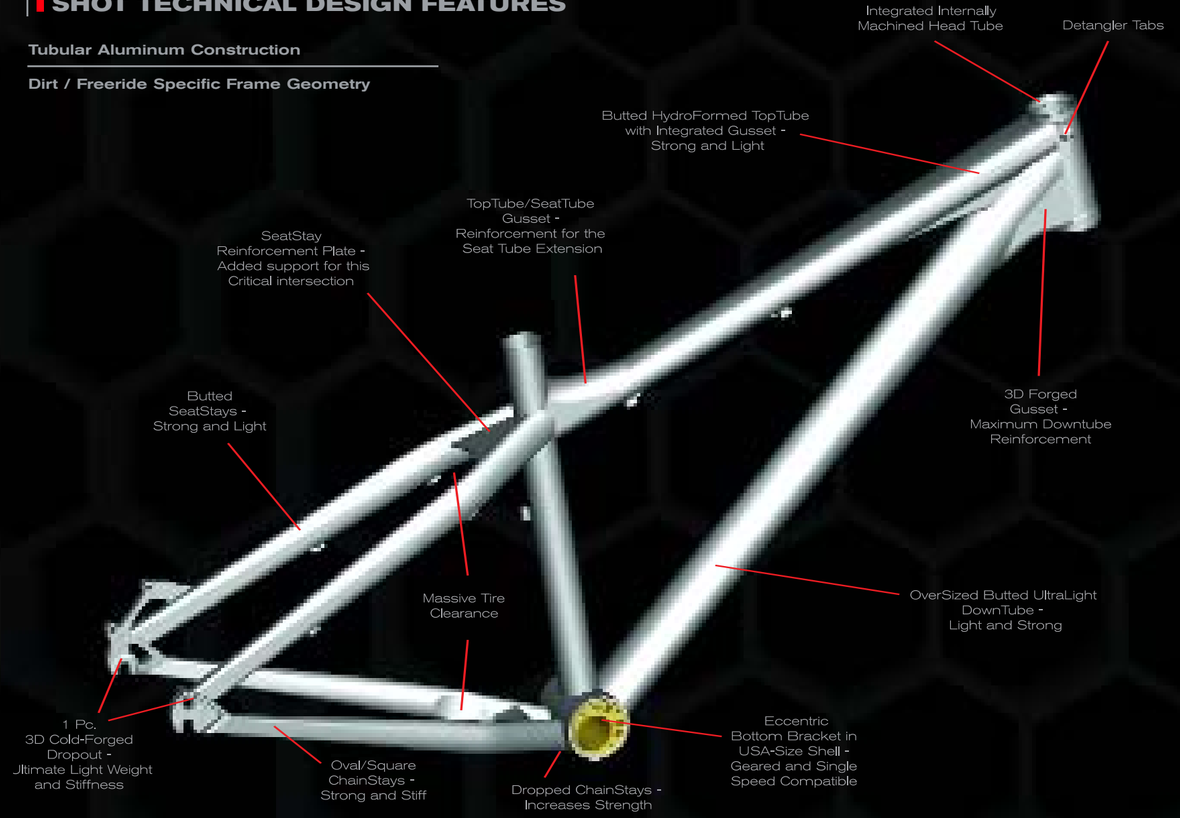

JUMP SHOT

SIZES (in) : 15.5"

COLOR : Matte Gray

WEIGHT : 31.6 lbs.

FRAME :

Dirt Jump Specific, 6061 Aluminum, Hydroform Top Tube, 565mm TTL, 2-Bolt Design Eccentric BB Shell, Fully Integrated HT, Detangler Cable Stops on HT

FORK :

RST Space Jump, 100mm Travel, Coil Spring, Magnesium Lowers, 2050 Aluminum Hard Anodized Steerer, 36mm Aluminum Stanchions, Rebound Adjust, 20mm Thru Axle

DRIVETRAIN :

Single Speed, Felt Tubular 3-Piece Cranks, Heat-Treated Welded 4130 Cr-Mo w/Pinch Bolt, Cogswell 28T 7mm Chainwheel, Felt Cassette Hub w/13T Cog

WHEELSET :

WTB Speed Disc XL 36H Rims w/Stainless Eyelets, Felt 20mm Thru Axle FT Hub & Sealed Bearing Cassette Hub w/Nutted Axle, 14G Stainless Spokes

COMPONENTS :

Truvativ Hussefelt Bars, Stem & Post, Maxxis Holy Roller 26 x 2.4 Tires, Felt Backpedal Alloy Platforms, Hayes MX-2 Mechanical Brakes, 180mm Front & 160mm Rear Rotors, Felt Alloy Handi-Caps

STRAIGHT SHOT

SIZES (in) : 15.5"

COLOR : Matte Sand

WEIGHT : 33.25 lbs.

FRAME :

Freeride Design, 6061 Aluminum, Hydroform Top Tube, 595mm TTL, Euro BB Shell w/ISCG Mount, Semi Integrated HT

FORK :

Marzocchi Z.1 Drop-Off IV 130mm Travel, Air+Coil Spring, Magnesium Lowers, 32mm Cr-Mo Stanchions, Rebound Adjust

DRIVETRAIN :

8-Speed, Sram SX5 Mid-Cage Rear Derailleur & Shifter, Truvativ Hussefelt Boxguide ISCG, Truvativ Hussefelt Crank w/38T Chainring, Sram Powerglide Cassette

WHEELSET :

WTB Speed Disc XL 36H Rims w/Stainless Eyelets, Felt Custom Cassette Hubs: 10mm Thru Axle RR/Bolted Axle FT, 14G Stainless Spokes

COMPONENTS :

Truvativ Hussefelt Bars, Stem & Post, Maxxis Minion 26 x 2.35 Kevlar Folding Tires, Felt Backpedal Alloy Platforms, Hayes Sole Hydraulic Brakes, 203mm Front & 160mm Rear Rotors, Super Semi Integrated Headset, Felt Alloy Handi-Caps

DOUBLE SHOT

SIZES (in) : 15.5"

COLOR : Matte Black

WEIGHT : 33.0 lbs.

FRAME :

Freeride Design, 6061 Aluminum, Hydroform Top Tube, 595mm TTL, Euro BB Shell w/ISCG Mount, Semi Integrated HT

FORK :

RST Launch RA, 130mm Travel, Coil Spring, 30mm Ti-Color Stanchions, Hydraulic Damping, Rebound Adjust

DRIVETRAIN :

16-Speed, Sram SX5 Mid-Cage Rear Derailleur & Shifters, Sram 3.0 FD, Powerglide Cassette, Suntour Duro-D Crank, 32/22T Chainrings & Nylon GrindGuard

WHEELSET :

WTB Dual Duty FR Rims w/Stainless Eyelets, Shimano M475 6-Bolt Hubs,14G Stainless Spokes

COMPONENTS :

Truvativ Hussefelt Bars, Stem & Post, Maxxis Minion 26 x 2.35 Kevlar Folding Tires, Felt Backpedal Alloy Platforms, Hayes MX-2 Mechanical Brakes, 203mm Front & 160mm Rear Rotors

VIRTUE AM

SIZES (in) : S (15.5) / M (17.5) / L (19.5) / XL (21.5)

COLOR : Matte Black

WEIGHT : 6.5 lbs. (with shock)

FRAME :

Virtue Endurance/All-Mountain Full Suspension Featuring Equilink, 130mm Travel, 7000 Series DB Aluminum w/Hydroform TT, Oversize DT & ST, Carbon Fiber Sub-Frame, Fully Integrated Head Tube

SHOCK:

Fox DHX Air 5.0 Position Sensitive Boost Valve, Adjustable Pro Pedal, Rebound Adjust

ACCESSORIES :

Integrated Headset, 7075 Aluminum Seatclamp w/Titanium Bolt & Scandium Barrel Nut, Two Derailleur Hangers

VIRTUE R

SIZES (in) : S (15.5) / M (17.5) / L (19.5) / XL (21.5)

COLOR : Matte Black

WEIGHT : 6.25 lbs. (with shock)

FRAME :

Virtue Lightweight Endurance Full Suspension Featuring Equilink, 130mm Travel, 7000 Series DB Aluminum w/Hydroform TT, Carbon Fiber Sub-Frame, Fully Integrated Head Tube

SHOCK:

Fox Float RP23 Air, Pro Pedal 3-Position Lever, Rebound Adjust

ACCESSORIES :

Integrated Headset, 7075 Aluminum Seatclamp w/Titanium Bolt & Scandium Barrel Nut, Two Derailleur Hangers

RXC TEAM

SIZES (in) : 15.5 / 17.5 / 19.5 / 21.5"

COLOR : Matte Black

WEIGHT : 3.3 lbs.

FRAME :

RXC Superlight Butted Kinesium w/Carbon Fiber Seatstays, Fully Integrated HT, Cold-Forged Dropouts

ACCESSORIES :

Integrated Headset, 7075 Aluminum Seatclamp w/Titanium Bolt & Scandium Barrel Nut, Two Derailleur Hangers

JUMP SHOT

SIZES (in) : 15.5"

COLOR : Matte Gray

WEIGHT : 4.75 lbs.

FRAME :

Dirt Jump Specific, 6061 Aluminum, Hydroform Top Tube, 565mm TTL, 2-Bolt Design Eccentric BB Shell, Fully Integrated HT, Detangler Cable Stops on HT

ACCESSORIES :

Integrated Headset w/Hollow Bolt Compression Device, SST Oryg Long Travel Cable Detangler, Two Derailleur Hangers: Dummy Type & Standard Type

VIRTUE SERIES SPECIFICATIONS

MODEL	VIRTUE One	VIRTUE Two	VIRTUE Three	VIRTUE Four
COLORS	Matte Black	Brushed Silver	Matte Red	Matte Charcoal
SIZES	S (15.5"), M (17.5"), L (19.5"), XL (21.5")	S (15.5"), M (17.5"), L (19.5"), XL (21.5")	S (15.5"), M (17.5"), L (19.5"), XL (21.5")	S (15.5"), M (17.5"), L (19.5"), XL (21.5")
FRAME	Equilink Endurance Full Suspension, 7005 Double-Butted Aluminum w/Hydroform TT & Carbon Fiber Sub-Frame, 130mm Travel, 45mm Integrated Head Tube, Replaceable Derailleur Hanger, Disc-Brake Specific	Equilink Endurance Full Suspension, 7005 Double-Butted Aluminum w/Hydroform TT & Carbon Fiber Sub-Frame, 130mm Travel, 45mm Integrated Head Tube, Replaceable Derailleur Hanger, Disc-Brake Specific	Equilink Endurance/All-Mountain Full Suspension, 7005 Double-Butted Aluminum w/Hydroform TT, Oversize DT and S1, Carbon Fiber Sub-Frame, 130mm Travel, 45mm Integrated Head Tube, Replaceable Derailleur Hanger, Disc-Brake Specific	Equilink Endurance/All-Mountain Full Suspension, 7005 Double-Butted Aluminum w/Hydroform TT, Oversize DT and S1, Carbon Fiber Sub-Frame, 130mm Travel, 45mm Integrated Head Tube, Replaceable Derailleur Hanger, Disc-Brake Specific
R/SHOCK	Fox Float RP23 Air, Pro Pedal 3-Position Lever, Rebound Adjust, 7.875 x 2.0	Fox Float RP23 Air, Pro Pedal 3-Position Lever, Rebound Adjust, 7.875 x 2.0	Fox Float RP2 Air, Pro Pedal, Rebound Adjust, 7.875 x 2.0	Answer Radium R Air Spring, Platform Plus Damping, Rebound Adjust, 7.875 x 2.0
FORK	Fox Talas RLC, 140/120/100mm Talas II External Travel Adjust, FIT Damping, Air Spring w/Coil Negative, Preload, Rebound, Compression Adjust, Push Button Lockout, Lockout Threshold, Disc Brake Specific	RockShox Revelation 409 U-Turn Air w/PopLoc Remote, 130/100mm Travel, Motion Control Damping, 32mm 7000 Aluminum Stanchions, Butted Aluminum Steerer Tube. Preload, External Rebound & Compression Adjust, Disc Brake Specific	RockShox Revelation 409 Dual Air 130mm Travel, Motion Control Damping, 32mm 7000 Aluminum Stanchions, Butted Aluminum Steerer Tube. Preload, External Rebound & Compression Adjustments, Disc Brake Specific	RockShox Recon 351 U-Turn Lockout, 130/85mm Travel Adjust, Motion Control Damping, 32mm Aluminum Stanchions, Preload, External Rebound Adjust, Disc Brake Specific
HEADSET	Integrated 1-1/8" Aheadset–Cane Creek Type 45 Degree Sealed Cartridge Bearing, w/Custom Felt Spacer Kit	Integrated 1-1/8" Aheadset–Cane Creek Type 45 Degree Sealed Cartridge Bearing, w/Custom Felt Spacer Kit	Integrated 1-1/8" Aheadset–Cane Creek Type 45 Degree Sealed Cartridge Bearing, w/Custom Felt Spacer Kit	Integrated 1-1/8" Aheadset–Cane Creek Type 45 Degree Sealed Cartridge Bearing, w/Custom Felt Spacer Kit
STEM	Easton EA70 Cold-Forged Aluminum, 1-1/8" Threadless, 2-Bolt, 6°, 15°=90mm; 17°=100mm; 19°=110mm; 21°=120mm	One-Piece CNC Machined Cold-Forged Aluminum, 1-1/8" Threadless, 4-Bolt, 5° 13.5=80mm; 15.5=90mm; 17.5=100mm; 19.5=110mm; 21.5=120mm	One-Piece CNC Machined Cold-Forged Aluminum, 1-1/8" Threadless, 4-Bolt, 5°, 13.5=80mm; 15.5=90mm; 17.5=100mm; 19.5=110mm; 21.5=120mm	One-Piece CNC Machined Cold-Forged Aluminum, 1-1/8" Threadless, 4-Bolt, 5°, 13.5=80mm; 15.5=90mm; 17.5=100mm; 19.5=110mm; 21.5=120mm
HANDLEBAR	Easton EC90 MonkeyLite SL Composite, Carbon Nanotube Technology (CNT), 24mm Rise, 8°, 15-21°: 610mm	Butted Aluminum, 30mm Rise, 6°, 15-17°=580mm; 19°=600; 21°=620mm	Butted Aluminum, 30mm Rise, 6°, 15-17°=580mm; 19°=600; 21°=620mm	Butted Aluminum, 30mm Rise, 6°, 15-17°=580mm; 19°=600; 21°=620mm
GRIPS	Felt Soft Kraton, 130mm Length, 30mm OD	Felt Soft Kraton, 130mm Length, 30mm OD	Felt Soft Kraton, 130mm Length, 30mm OD	Felt Soft Kraton, 130mm Length, 30mm OD
BAR END CAPS	Rubber Plugs w/Felt Bubble Decal	Rubber Plugs w/Felt Bubble Decal	Rubber Plugs w/Felt Bubble Decal	Rubber Plugs w/Felt Bubble Decal
SHIFTERS	Shimano XTR SL-M970 Rapid Fire, with Push-Pull Release, 27-Speed	Shimano XT SL-M760 Rapid Fire, with Push-Pull Release, 27-Speed	Shimano Deore SL-M511 Rapidfire 27-Speed	Shimano Deore SL-M511 Rapidfire 27-Speed
F/DERAILLEUR	Shimano XTR FD-M970 E-Type	Shimano XT FD-M760 E-Type	Shimano LX FD-M580 E-Type	Shimano LX FD-M580 E-Type
R/DERAILLEUR	Shimano XTR Top-Normal RD-M971	Shimano XT Top-Normal RD-M761	Shimano Deore XT Top-Normal RD-M761	Shimano Deore XT Top-Normal RD-M761
CRANKSET	Shimano XTR FCM-970 Hollowtech II 44/32/22T, 15=172.5mm; 17=175mm, 19-21=177.5	Shimano Deore XT FCM-760 Hollowtech II 44/32/22T, 15=170mm; 17-21=175mm	Shimano LX M580 Hollowtech II 44/32/22T, 15=170mm; 17-21=175mm	Truvativ Firex SX, 2-Piece Giga-X-Pipe External Bearing, AL-66, 44/32/22T, 7075 Outer Ring, 15=170mm; 17-21=175mm
BB SET	Included with Crankset	Included with Crankset	Included with Crankset	Truvativ Giga X Pipe XR, Super Oversized Heat Treated Cr-Mo
FREEWHEEL	Shimano XTR CS-M970 9-SP Cassette, 11-34T	Shimano XT, 9-Speed Cassette, 11-34T	Shimano HG-50, 9-Speed Cassette, 11-32T	Shimano HG-50, 9-Speed Cassette, 11-32T
CHAIN	Shimano Dura Ace CH-7701 Silver / Silver	Sram PC-951 Silver Outer	Sram PC-951 Silver Outer	Sram PC-951 Silver Outer
BRAKE LEVERS	Avid Juicy Ultimate	Avid Juicy 7	Shimano Deore BL-M535	Hayes Sole
BRAKES	Avid Juicy Ultimate Hydraulic, Carbon Lever, Rotors: 180mm Front & 160 Rear	Avid Juicy 7 Hydraulic, Rotors: 180mm Front & 160 Rear	Shimano Deore BR-M535 Hydraulic, Rotors: 180mm Front & 160mm Rear	Hayes Sole Hydraulic, Rotors: 180mm Front & 160mm Rear
CABLES	Felt Black Derailleur Cables	Felt Black Derailleur Cables	Felt Black Derailleur Cables	Felt Black Derailleur Cables
SADDLE	Selle Italia SLR Ti Rails	Felt "Facade" Race, Double-Density Base, Tubular Cr-Mo Rails	Felt "Facade" Race, Double-Density Base, Satin Steel Rails	Felt "Facade" Race, Double-Density Base, Satin Steel Rails
SEAT POST	Easton EC70 Composite One-Bolt Micro-Adjust, 27.2mm x 350mm	Two-Bolt Alloy Micro-Adjust, 27.2mm x 350mm	Alloy Micro-Adjust, Low-Profile Head, 30.9mm x 350mm	Alloy Micro-Adjust, Low-Profile Head, 30.9mm x 350mm
SEAT POST CLAMP	Felt Bolt-Type, CNC 7075 Aluminum, w/Titanium Bolt & Scandium Barrel Nut, 31.8mm	Felt Bolt-Type, Cold Forged + CNC, 6061 Aluminum, w/Barrel Nut, 31.8mm31.8mm	Felt Bolt-Type, Cold Forged + CNC, 6061 Aluminum, w/Barrel Nut, 34.9mm	Felt Bolt-Type, Cold Forged + CNC, 6061 Aluminum, w/Barrel Nut, 34.9mm
F/HUB	Wheelset	Wheelset	Shimano HB-RM65 CenterLock, 32H	Shimano FH-M475, 6-Bolt Type, 32H
R/HUB	Wheelset	Wheelset	Shimano FH-RM65 Cassette CenterLock, 32H	Shimano FH-M475 Cassette, 6-Bolt Type, 32H
RIMS	Mavic CrossMax SL Disc Tubeless Wheelset	Mavic CrossRide Disc-Specific Wheelset	Mavic XC-117 Disc Doublewall, 26 x 1.5 x 32H, Black Anodized	WTB SX 24 Disc Doublewall, 26 x 1.5 x 32H, Black Anodized
TIRES	Maxxis Ignitor UST Tubeless 26 x 2.1, 120TPI Kevlar Folding Bead	Maxxis Ignitor 26 x 2.1 , 60TPI, Kevlar Folding Bead, Superlight 115g Inner Tubes	Maxxis Ignitor 26 x 2.1 , 60TPI, Kevlar Folding Bead, Superlight 115g Inner Tubes	Maxxis Ignitor 26 x 2.1 , 60TPI, Kevlar Folding Bead, Superlight 115g Inner Tubes
SPOKES	Wheelset	Wheelset	Sandblast Black Stainless 15G, Brass Nipples	Sandblast Black Stainless 15G, Brass Nipples
PEDALS	N/A	N/A	MTB Low-Profile Design, Alloy Cage/Alloy Body, 255g	MTB Low-Profile Design, Alloy Cage/Alloy Body, 255g

RXC SERIES SPECIFICATIONS

MODEL	RXC Pro	RXC Elite
COLORS	White Gold	Steel Blue
SIZES	15.5, 17.5, 19.5, 21.5"	15.5, 17.5, 19.5, 21.5"
FRAME	Superlight XC Series 6061 Double-Butted Aluminum, with Carbon Fiber Seat Stays w/Increased Tire Clearance, Monocoty Design, 45mm Integrated Head Tube, Replaceable Derailleur Hanger, Disc-Brake Specific	Superlight XC Series 6061 Double-Butted Aluminum, with Carbon Fiber Seat Stays w/Increased Tire Clearance, Monocoty Design, Semi-Integrated Head Tube, Replaceable Derailleur Hanger, Disc-Brake Specific
FORK	Fox FB0RL, FIT Damper w/Push Button Lockout, 1-1/8" Butted Aluminum Steer Tube, 32mm Aluminum Stanchions, Magnesium Lower, Air Spring, 80mm Travel	RockShox Reba SL, 100/85mm Alll Travel Adjust, Butted Aluminum SteerTube, 32mm 7000 Aluminum Stanchions, Magnesium Lower, Dual Air Spring, with External Rebound Adjust, Disc Brake Specific
HEADSET	Integrated 1-1/8" Aheadset–Cane Creek Type 45 Degree Sealed Cartridge Bearing, w/Custom Felt Spacer Kit	Semi-Integrated 1-1/8" Aheadset w/Custom Felt Spacer Kit
STEM	One-Piece CNC Machined Cold-Forged Aluminum, 1-1/8" Threadless, 4-Bolt, 5°, 13.5=80mm; 15.5=90mm; 17.5=100mm; 19.5=110mm; 21.5=120mm	One-Piece Cold-Forged Aluminum, 1-1/8" Threadless, 4-Bolt, 5°, 13.5=80mm; 15.5=90mm; 17.5=100mm; 19.5=110mm; 21.5=120mm
HANDLEBAR	Aluminum Flatbar, 6°, 13.5=560mm; 15.5-17.5=580mm; 19.5-21.5=600	Butted Aluminum, 30mm Rise, 6°, 13.5-17.5=580mm; 19.5=600mm; 21.5=620mm
GRIPS	Felt Soft Kraton, 130mm Length, 30mm OD	Felt Soft Kraton, 130mm Length, 30mm OD
BAR END CAPS	Rubber Plugs w/Felt Bubble Decal	Rubber Plugs w/Felt Bubble Decal
SHIFTERS	Shimano XT SL-M760 Rapid Fire, w/Push-Pull Release, 27-Speed	Shimano LX SL-M580 Rapid Fire, w/Push-Pull Release, 27-Speed
F/DERAILLEUR	Shimano Deore XT FD-M761 Top Pull	Shimano Deore LX FD-M580 Top Pull
R/DERAILLEUR	Shimano XTR Top-Normal RD-M971	Shimano Deore XT Top-Normal RD-M761
CRANKSET	Shimano Deore XT FCM-760 Hollowtech II 44/32/22T, 15.5=170mm; 17.5-21.5=175mm	Truvativ Firex SX, 2-Piece Giga-X-Pipe External Bearing, AL-66, 44/32/22T, 7075 Outer Ring, 15.5=170mm; 17.5-21.5=175mm
BB SET	Included with Crankset	Truvativ Giga X Pipe XR, Super Oversized Heat Treated Cr-Mo
FREEWHEEL	Shimano XT 9-Speed Cassette, 11-34T	Shimano HG-50, 9-Speed Cassette, 11-32T
CHAIN	Sram PC-951 Silver Outer	Sram PC-951 Silver Outer
BRAKE LEVERS	Avid Juicy 7	Shimano Deore BL-M535
BRAKES	Avid Juicy 7 Hydraulic, Rotors: 160mm Front & Rear	Shimano Deore BR-M535 Hydraulic Disc, Rotors: 160mm Front & Rear
CABLES	Felt Black Derailleur Cables	Felt Black Derailleur Cables
SADDLE	Felt "Facade" Race, Double-Density Base, Tubular Cr-Mo Rails	Felt "Facade" Race, Double-Density Base, Satin Steel Rails
SEAT POST	Two-Bolt Alloy Micro-Adjust, 27.2mm x 350mm	Alloy Micro-Adjust, Low-Profile Head, 27.2mm x 350mm
SEAT POST CLAMP	Felt Bolt-Type, Cold Forged + CNC, 6061 Aluminum, w/Barrel Nut, 30.6mm	Felt Bolt-Type, Cold Forged + CNC, 6061 Aluminum, w/Barrel Nut, 30.6mm
F/HUB	Wheelset	Shimano HB-RM65 CenterLock, 32H
R/HUB	Wheelset	Shimano FH-RM65 Cassette CenterLock, 32H
RIMS	Mavic CrossRide Disc-Specific Wheelset	Mavic XC-117 Disc Doublewall, 26 x 1.5 x 32H, Black Anodized
TIRES	Maxxis Ignitor 26 x 2.1 , 60TPI, Kevlar Folding Bead, Superlight 115g Inner Tubes	Maxxis Ignitor 26 x 2.1 , 60TPI, Kevlar Folding Bead, Superlight 115g Inner Tubes
SPOKES	Wheelset	Sandblast Black Stainless 15G, Brass Nipples
PEDALS	N/A	MTB Low-Profile, Alloy Cage/Alloy Body, 255g

All specifications subject to change without notice due to availability.

Q SERIES SPECIFICATIONS

MODEL	Q920	Q720	Q620
COLORS	Matte Black	Liquid Gray	Matte Red
SIZES	13.5, 15.5, 17.5, 19.5, 21.5"	13.5, 15.5, 17.5, 19.5, 21.5"	13.5, 15.5, 17.5, 19.5, 21.5"
FRAME	Lightweight XC Series 6061 Aluminum, w/Hydroform TT & Internally/Externally Butted Tubing , Monocoty Design, Semi-Integrated Head Tube, Replaceable Derailleur Hanger, Disc Brake Specific.	Lightweight XC Series 6061 Aluminum, w/Hydroform TT & Externally Butted Tubing, Monocoty Design, Semi-Integrated Head Tube, Replaceable Derailleur Hanger, Disc Brake Specific	Lightweight XC Series 6061 Aluminum, w/Hydroform TT & Externally Butted Tubing, Monocoty Design, Semi-Integrated Head Tube, Replaceable Derailleur Hanger, Disc Brake Specific
FORK	RockShox Tora 318 Air w/ Lockout, 130/100/80mm All Travel Adjust, Air Spring, Motion Control Damping, 32mm Cr-Mo Stanchions, Spring Preload, External Rebound Adjust	RockShox Dart 2 w/TurnKey Lockout, Aluminum Lowers/Crown, Steel Steer Tube, 28mm 4130 Cr-Mo Upper Tubes, Preload Adjust, 80mm Travel, Disc Brake Specific	RockShox Dart 1 Aluminum Lowers/Crown, Steel Steerer Tube, 28mm Upper Tubes, Preload Adjust, 100mm Travel, Disc Brake Specific
HEADSET	Semi-Integrated 1-1/8" Aheadset w/Custom Felt Spacer Kit	Semi-Integrated 1-1/8" Aheadset w/Custom Felt Spacer Kit	Semi-Integrated 1-1/8" Aheadset w/Custom Felt Spacer Kit
STEM	One-Piece CNC Machined Cold-Forged Aluminum, 1-1/8" Threadless, 4-Bolt, 5°, 13.5=80mm; 15.5=90mm; 17.5=100mm; 19.5=110mm; 21.5=120mm	One-Piece Melt-Forged Aluminum, 1-1/8" Threadless, 4-Bolt, 10 °, 13.5/15.5=80mm; 17.5/19.5=100mm; 21.5=120mm	One-Piece Melt-Forged Aluminum, 1-1/8" Threadless, 4-Bolt, 10°, 13.5/15.5=80mm; 17.5/19.5=100mm; 21.5=120mm
HANDLEBAR	Butted Aluminum, 30mm Rise, 6 Degree, 13.5-17.5=580mm; 19.5=600mm; 21.5=620mm	Butted Aluminum, 30mm Rise, 6 Degree, 13.5-17.5=580mm; 19.5=600mm; 21.5=620mm	Steel, 30mm Rise, 6 Degree, 13.5-17.5=580mm; 19.5=600mm; 21.5=620mm
GRIPS	Felt Soft Kraton, 130mm Length, 30mm OD	Felt Soft Kraton, 130mm Length, 30mm OD	Felt Soft Kraton, 130mm Length, 30mm OD
BAR END CAPS	Rubber Plugs w/Felt Bubble Decal	Rubber Plugs w/Felt Bubble Decal	Rubber Plugs w/Felt Bubble Decal
SHIFTERS	Shimano LX SL-M580 Rapid Fire, w/Push-Pull Release, 27-Speed	Shimano Deore SL-M511 Rapidfire, 27-Speed	Shimano Altus ST-EF50 EZ-Fire Plus, 24 Speed
F/DERAILLEUR	Shimano Deore LX FD-M580 Top Pull	Shimano Deore FD-M530 Top Pull	Shimano C050 Dual Pull
R/DERAILLEUR	Shimano Deore XT Top-Normal RD-M761	Shimano Deore XT Top-Normal RD-M761	Shimano Deore Top-Normal RD-M511
CRANKSET	Truvativ Firex SX, 2-Piece Giga-X-Pipe External Bearing, AL-66, 44/32/22T, 7075 Outer Ring, 13.5-15.5=170mm; 17.5-21.5=175mm	Truvativ Iso-Flow 44/32/22T Steel Rings, 13.5-15.5=170mm; 17.5-21.5=175mm	Truvativ X-Flow, 42/34/24T Steel Rings, 13.5-15.5=170mm; 17.5-21.5=175mm
BB SET	Truvativ Giga X Pipe XR, Super Oversized Heat Treated Cr-Mo	Truvativ Square LE, Cartridge, Cr-Mo Axle & Cups	TH Cartridge, Cr-Mo Axle & Cup
FREEWHEEL	Shimano HG-50, 9-Speed Cassette, 11-32T	Shimano HG-50, 9-Speed Cassette, 11-32T	Shimano HG-40, 8-Speed Cassette, 11-30T
CHAIN	Sram PC-951 Silver Outer	Sram PC-951 Silver Outer	KMC Z72 Silver Outer
BRAKE LEVERS	Shimano Deore BL-M535	Hayes Sole	Shimano Alivio, Integrated w/Shifters
BRAKES	Shimano Deore BR-M535 Hydraulic, Rotors: 180mm Front & 160mm Rear	Hayes Sole Hydraulic, Rotors: 180mm Front & 160mm Rear	Shimano Alivio BRM-415 Mechanical, Rotors: 180mm Front & 160mm Rear
CABLES	Felt Black Derailleur Cables	Felt Black Derailleur Cables	Felt Smoky Black Carbon Look, w/Felt Head Tube Protectors
SADDLE	Felt "Facade" Race, Double-Density Base, Satin Steel Rails	Felt "Facade" Race, Double-Density Base, Satin Steel Rails	Felt "Facade" Comfort, Double-Density Base, Satin Steel Rails
SEAT POST	Alloy Micro-Adjust, Low-Profile Head, 27.2mm x 350mm	Alloy Micro-Adjust, Low-Profile Head, 27.2mm x 350mm	Alloy Micro-Adjust, Low-Profile Head, 27.2mm x 350mm
SEAT POST CLAMP	Felt Bolt-Type, Cold Forged + CNC, 6061 Aluminum, w/Barrel Nut, 31.8mm	Felt Bolt-Type, Cold Forged + CNC, 6061 Aluminum, w/Barrel Nut, 31.8mm	Felt Bolt-Type, Cold Forged + CNC, 6061 Aluminum, w/Barrel Nut, 31.8mm
F/HUB	Shimano HB-RM65 CenterLock, 32H	Shimano FH-M475, 6-Bolt Type, 32H	Shimano HB-RM65 CenterLock, 32H
R/HUB	Shimano FH-RM65 Cassette CenterLock, 32H	Shimano FH-M475 Cassette, 6-Bolt Type, 32H	Shimano FH-RM65 Cassette CenterLock, 32H
RIMS	Mavic XC-117 Disc Doublewall, 26 x 1.5 x 32H, Black Anodized	WTB SX 24 Disc Doublewall, Single Eyelets, 26 x 1.5 x 32H, Black Anodized	WTB SX 24 Disc Doublewall, 26 x 1.5 x 32H, Black Anodized
TIRES	Maxxis Ignitor 26 x 2.1, 60TPI, Kevlar Folding Bead, Superlight 115g Inner Tubes	HFR Rocky Wolf 26 x 2.1	HFR Rocky Wolf 26 x 2.1
SPOKES	Sandblast Black Stainless 15G, Brass Nipples	Sandblast Black Stainless 15G, Brass Nipples	Sandblast Black Stainless 15G, Brass Nipples
PEDALS	MTB Low-Profile, Alloy Cage/Alloy Body, 255g	MTB Design Alloy Cage/Alloy Body	MTB Design Steel Cage/PP Body

SHOT SERIES SPECIFICATIONS

MODEL	JUMP SHOT	STRAIGHT SHOT	DOUBLE SHOT
COLORS	Matte Grey	Matte Sand	Matte Black
SIZES	15.5	15.5	15.5
FRAME	Jump Shot Design, 6061 Aluminum, Hydroform Top Tube, 56.5mm TTL, Vertical Dropouts, USA BB Shell & 7-Bolt Design Eccentric BB Set, Detachable Cable Stops on HT, 45mm Integrated HT, Disc Brake Specific, Replaceable Derailleur Hanger	Shot Design, 6061 Aluminum, Hydroform Top Tube, 595mm TTL, Vertical Dropouts, Euro BB Shell, Disc Brake Specific, Replaceable Derailleur Hanger, ISCG Chainguide Mount	Shot Design, 6061 Aluminum, Hydroform Top Tube, 595mm TTL, Vertical Dropouts, Euro BB Shell, Disc Brake Specific, Replaceable Derailleur Hanger, ISCG Chainguide Mount
FORK	RST Space Jump, 100mm Travel, Coil Spring, Magnesium Lowers, Alloy Crown, 2050 Aluminum Hard Ano Steerer, 36mm Aluminum Stanchions, Rebound Adjust, 20mm Thru Axle	Marzocchi Z.1 Drop-Off IV 130mm Travel, 1-Side Air / 1-Side Coil Spring, Magnesium Lowers, Alloy Crown, Steel Steerer, 32mm Cr-Mo Stanchions, External Air Preload Adjust, Internal Rebound Adjust, Standard Axle	RST "Launch" RA, 130mm Travel, Coil Spring, Aluminum Lowers, Black Alloy Crown, Steel Steerer, 30mm Ti-Color Steel Stanchions, w/Hydraulic Damping, Rebound Adjust, Standard Axle
HEADSET	Integrated 1-1/8" Aheadset–Cane Creek Type 45 Degree Sealed Cartridge Bearing, w/Custom Felt Spacer Kit & SST Cable Detangler	Super-Semi-Integrated 1-1/8" Aheadset, 12mm Deep Cr-Mo Cups, Oversized 3/16" Caged Bearing, w/Custom Felt Spacer Kit	Semi-Integrated 1-1/8" Aheadset w/Custom Felt Spacer Kit
STEM	Truvativ Hussefelt Cold-Forged Aluminum 4-Bolt, 31.8mm Bar Clamp, 7°, 40mm Extension	Truvativ Hussefelt Cold-Forged Aluminum 4-Bolt, 31.8mm Bar Clamp, 7°, 40mm Extension	Truvativ Hussefelt Cold-Forged Aluminum 4-Bolt, 31.8mm Bar Clamp, 7°, 40mm Extension
HANDLEBAR	Truvativ Hussefelt AL-66, 50mm Rise, 31.8mm Bar Bore 640mm	Truvativ Hussefelt AL-66, 25mm Rise, 31.8mm Bar Bore 680mm	Truvativ Hussefelt AL-66, 25mm Rise, 31.8mm Bar Bore 680mm
GRIPS	Felt Soft Kraton, 130mm Length, 30mm OD	Felt Soft Kraton, 130mm Length, 30mm OD	Felt Soft Kraton, 130mm Length, 30mm OD
BAR END CAPS	Felt Handi-Caps Alloy Wedge Type	Felt Handi-Caps Alloy Wedge Type	Rubber Plugs w/Felt Bubble Decal
SHIFTERS	N/A	Sram SX5 Trigger 8-Speed RHS Only	Sram SX5 Trigger 8-Speed
F/DERAILLEUR	N/A	Truvativ Hussefelt Boxguide, ISCG Mount, 5mm Alloy Plate, Cr-Mo Allen Head Hardware	Sram 3.0
R/DERAILLEUR	N/A	Sram SX5 Mid-Cage	Sram SX5 Mid-Cage
CRANKSET	Felt Tubular 3-Piece Cranks, 4130 Cr-Mo, Heat-Treated, Welded w/Pinch Bolt, 170mm, w/Cogswell 28T 7mm Thick Chainwheel	Truvativ Hussefelt, w/Heat-Treated Steel 38T Single Chainring, 170mm	SR/Suntour Duro-D, Double Steel Chainring w/Nylon GrindGuard, 32/22T, 170mm
BB SET	8-Spline Heat Treated Cr-Mo Axle, Steel Euro Cups w/4 Cartridge Bearings	Truvativ Giga Pipe DH ISIS Drive, Aluminum Cups	SR/Suntour Hex Drive, Steel Cups
FREEWHEEL	Compact Cassette Single Speed 1/2 x 3/32" x 13T	Sram PG-830 Powerglide II, 8-Speed 11-32T CP Finish	Sram PG-830 Powerglide II, 8-Speed 11-32T CP Finish
CHAIN	KMC Z610HX Single-Speed 1/2 X 3/32	KMC Z72 Silver Outer	KMC Z72 Silver Outer
BRAKE LEVERS	Hayes MX-2	Hayes Sole	Hayes MX-2
BRAKES	Hayes MX-2 Mechanical, Rotors: 180mm Front & 160mm Rear	Hayes Sole Hydraulic, Rotors: 203mm Front & 160mm Rear	Hayes MX-2 Mechanical, Rotors: 203mm Front & 160mm Rear
CABLES	Felt Smoky Black Carbon Look, w/Felt Head Tube Protectors	Felt Black Derailleur Cables	Felt Smoky Black Carbon Look, w/Felt Head Tube Protectors
SADDLE	Felt Dirt Jump BMX, 7mm Cr-Mo Rails	Felt Freeride w/Gel 7mm Cr-Mo Rails	Felt Freeride 7mm Steel Rails
SEAT POST	Truvativ XRDC Double-Bolt, 31.6mm x 250mm	Truvativ XRDC Double-Bolt, 31.6mm x 350mm	Truvativ XRDC Double-Bolt, 31.6mm x 350mm
SEAT POST CLAMP	Q/R Type Cold Forged 6061 Aluminum 31.8mm	Q/R Type Cold Forged 6061 Aluminum 31.8mm	Q/R Type Cold Forged 6061 Aluminum 31.8mm
F/HUB	Felt 20mm Thru Axle, Cold-Forged Aluminum Body, 36H	Felt Cold-Forged Aluminum Body, w/3-Piece Bolted Axle, 36H	Shimano FH-M475, 6-Bolt Type
R/HUB	Felt Single Speed Cassette, 11T Cog, Cold-Forged Aluminum Body, Sealed Bearing, BMX Style Nutted Axle, 36H	Felt Cassette, Cold-Forged Aluminum Body, 4-Bearing, w/10mm Nutted Thru Axle, 36H	Shimano FH-M475 Cassette, 6-Bolt Type
RIMS	WTB Speed Disc XL Disc 32mm Wide, Stainless Steel Eyelets, 36H	WTB Speed Disc XL Disc 32mm Wide, Stainless Steel Eyelets, 36H	WTB Dual Duty FR Disc Doublewall, Stainless Steel Eyelets
TIRES	Maxxis Holy Roller 26 x 2.4 60TPI	Maxxis Minion DHR/DHF 26 x 2.35, 60TPI Kevlar Folding Bead	Maxxis Minion DHR/DHF 26 x 2.35, 60TPI Kevlar Folding Bead
SPOKES	Sandblast Black Stainless 14G, Brass Nipples	Sandblast Black Stainless 14G, Brass Nipples	Sandblast Black Stainless 14G, Brass Nipples
PEDALS	Felt Backpedal Alloy Platform	Felt Backpedal Alloy Platform	Felt Backpedal Alloy Platform

All specifications subject to change without notice due to availability.

GEOMETRY

	SIZE	A: HA	B: SA	C: TTL (Horizontal)	D: TTL (C to C)	E: HEAD TUBE LENGTH	F: ST LENGTH (C to T)	G: ST LENGTH (C to C)	H: BB DROP	I: CHAIN STAY LENGTH	J: FRONT CENTER	K: WHEELBASE	L: RAKE	M: STANDOVER
VIRTUE 1	15.5	69.8	73.5	555	540	110	420	305	15	435	629.4	1063.9	39	738
VIRTUE 2	17.5	69.8	73.5	584	565.4	120	444.5	319.5	15	435	659	1093.5	39	756
	19.5	69.8	73.5	607	583.3	130	495.3	360.3	15	435	682.5	1117.1	39	785
	21.5	69.8	73.5	630	604.5	160	546	396	15	435	707.4	1141.9	39	818

	SIZE	A: HA	B: SA	C: TTL (Horizontal)	D: TTL (C to C)	E: HEAD TUBE LENGTH	F: ST LENGTH (C to T)	G: ST LENGTH (C to C)	H: BB DROP	I: CHAIN STAY LENGTH	J: FRONT CENTER	K: WHEELBASE	L: RAKE	M: STANDOVER
VIRTUE 3	15.5	69	73.5	546.1	531.5	110	420	305	15	435	628.6	1063.7	39	734
VIRTUE 4	17.5	69	73.5	571.5	553.5	120	444.5	319.5	15	435	654.7	1089.3	39	751
	19.5	69	73.5	596.9	573.6	130	495.3	360.3	15	435	680.8	1115.4	39	781
	21.5	69	73.5	622.3	597.1	160	546	396	15	435	708.5	1143.1	39	815

	SIZE	A: HA	B: SA	C: TTL (Horizontal)	D: TTL (C to C)	E: HEAD TUBE LENGTH	F: ST LENGTH (C to T)	G: ST LENGTH (C to C)	H: BB DROP	I: CHAIN STAY LENGTH	J: FRONT CENTER	K: WHEELBASE	L: RAKE	M: STANDOVER
RXC ELITE	15.5	71	74.5	560	546.3	120	394	333	40	426	625.2	1048	39	687
RXC PRO	17.5	71	73	590	564.7	120	445	386	40	422	639.5	1058.4	39	732
	19.5	71	73	620	594.3	130	495	436	40	422	669.8	1088.7	39	773
	21.5	71	72.5	635	611.2	150	546	487	40	422	680	1098.9	39	817

	SIZE	A: HA	B: SA	C: TTL (Horizontal)	D: TTL (C to C)	E: HEAD TUBE LENGTH	F: ST LENGTH (C to T)	G: ST LENGTH (C to C)	H: BB DROP	I: CHAIN STAY LENGTH	J: FRONT CENTER	K: WHEELBASE	L: RAKE	M: STANDOVER
Q920	13.5	70.5	73.5	515	511.4	110	343	279	40	422	574.6	993.4	39	673
Q720	15.5	70.5	73	550	530.9	120	394	332	40	422	604.7	1023.6	39	707
Q620	17.5	70.5	73	578	552.8	120	445	385	40	422	632.6	1051.6	39	740
	19.5	70.5	73	603	578.1	130	495	436	40	422	657.9	1076.9	39	774
	21.5	70.5	73	620	597.3	150	546	489	40	422	670.3	1089.3	39	811

	SIZE	A: HA	B: SA	C: TTL (Horizontal)	D: TTL (C to C)	E: HEAD TUBE LENGTH	F: ST LENGTH (C to T)	G: ST LENGTH (C to C)	H: BB DROP	I: CHAIN STAY LENGTH	J: FRONT CENTER	K: WHEELBASE	L: RAKE	M: STANDOVER
JUMP SHOT	15.5	69.5	72	565	552.1	120	380	288	26	430	629.2	1058.4	43	701

	SIZE	A: HA	B: SA	C: TTL (Horizontal)	D: TTL (C to C)	E: HEAD TUBE LENGTH	F: ST LENGTH (C to T)	G: ST LENGTH (C to C)	H: BB DROP	I: CHAIN STAY LENGTH	J: FRONT CENTER	K: WHEELBASE	L: RAKE	M: STANDOVER
STRAIGHT DOUBLE	15.5	69.5	72	595	581.8	120	380	288	20	430	662	1091.6	43	710

VIRTUE SERIES

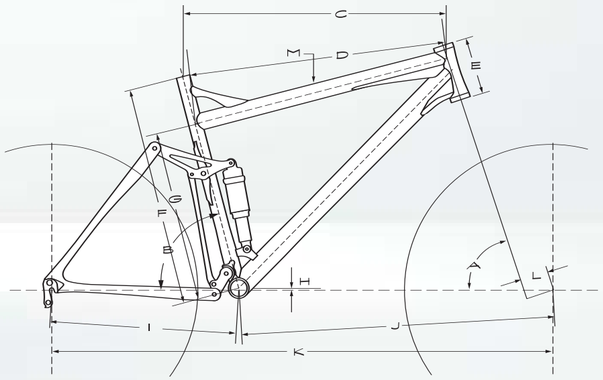

RXC SERIES / Q SERIES

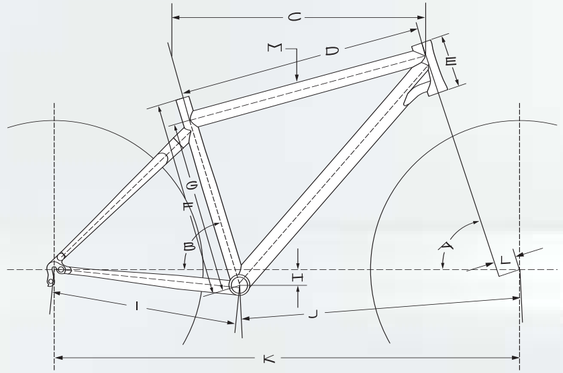

REFERENCE GUIDE

A = Head Tube Angle
B = Seat Tube Angle
C = Top Tube Length (Horiz.)
D = Top Tube Length (C - C)
E = Head Tube Length
F = Seat Tube Length (C - T)
G = Seat Tube Length (C - C)
H = BB Drop
I = Chain Stay Length
J = Front Center
K = Wheel Base
L = Fork Rake
M = Stand Over

(Horiz.) = Horizontal
(C - C) = Center to Center
(C - T) = Center to Top

SHOT SERIES

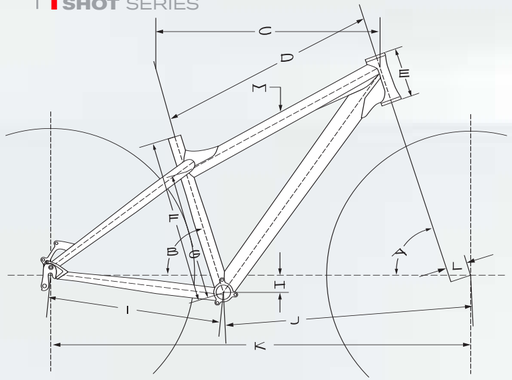

FELT APPAREL

CORP LOGO T

MATERIAL : 100% COTTON
COLOR : BLACK
SIZES : YOUTH L / S / M / L / XL / XXL
TAILORED FIT

EQUILINK T

MATERIAL : 100% COTTON
COLOR : RED
SIZES : S / M / L / XL / XXL
TAILORED FIT

NINE T

MATERIAL : 100% COTTON
COLOR : BROWN
SIZES : S / M / L / XL / XXL
TAILORED FIT

TRESTLES T

MATERIAL : 100% COTTON
COLOR : NATURAL
SIZES : S / M / L / XL / XXL
TAILORED FIT

PROPAGANDA T

MATERIAL : 100% COTTON
COLOR : CRANBERRY
SIZES : S / M / L / XL / XXL
TAILORED FIT

WOMENS BABY RIB T

MATERIAL : 100% COTTON
COLOR : BABY BLUE
SIZES : M (ONE SIZE FITS ALL)

WOMENS BABY RIB LS-T

MATERIAL : 100% COTTON
COLOR : ASPHALT
SIZES : S / M / L / XL / XXL

WOMENS FLEECE ZIP HOODY

MATERIAL : 100% FLEECE COTTON
COLOR : BLACK
SIZES : S / M & L / XL

WOMENS RIBBED TANK

MATERIAL : 2x1 RIBBED COTTON
COLOR : BLACK
SIZES : M (ONE SIZE FITS ALL)

MENS CORP LS-T

MATERIAL : 100% COTTON
COLOR : BLACK
SIZES : S / M / L / XL / XXL

OUR APPAREL IS CONSTANTLY BEING UPDATED, SO PLEASE CHECK WWW.FELTBICYCLES.COM FOR OUR LATEST STYLES AND DESIGNS.

MENS CORP HOODY

MATERIAL : 100% COTTON / 9.3 OZ.
COLOR : BLACK
SIZES : L / XL / XXL

TEAM ISSUE JERSEY

MATERIAL : SQ PRO LYCRA
MENS : XS / S / M / L / XL / XXL / XXXL
WOMENS : S / M

TEAM ISSUE WIND VEST

MATERIAL : NYLON / NYLON MESH BACK
MENS : XS / S / M / L / XL / XXL / XXXL
WOMENS : S / M

TEAM ISSUE SHORT

MATERIAL : PRO TEX / ION CHAMOIS
MENS : XS / S / M / L / XL / XXL / XXXL
WOMENS : M / L

TEAM ISSUE SOCKS

MATERIAL : COOLMAX / NYLON BLEND
COLOR : BLACK
SIZES : S / M / L / XL
MADE BY : DeFEET

F LOGO WATER BOTTLES

COLOR : TRANSLUCENT
SIZES : 22 OZ. / 28 OZ.

F LOGO FLEXFIT HAT

COLOR : BLACK
SIZES : M/L & L /XL

COOL MESH VISOR

COOLMAX SWEATBAND
COLOR : BLACK
SIZES : ONE SIZE FITS ALL

CRUISER BEANIE

MATERIAL : FINE KNIT WOOL
COLOR : BLACK
SIZES : ONE SIZE FITS ALL

FELT PRO RACER TIPS

We asked a few of our sponsored professional athletes what their fondest moment on their Felt was, as well as what training tips and advice they had for all of the aspiring racers out there.

Here's what they had to say...

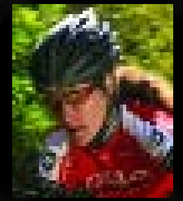

JAMIE WHITMORE – VIRTUE ONE, RXC TEAM RIDER
PROFESSIONAL MOUNTAIN BIKER

Favorite 'Felt moment' : Winning my first World Championship on my RXC Team!

Training tip : When training with a partner, always pick someone who will push and motivate you (in this case, my husband Courtney!)

Best race day advice : Always race like your competition is right on your heels – even when they're way behind you.

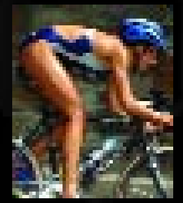

EMMA SNOWSILL – DA/F1 RIDER
PROFESSIONAL TRIATHLETE

Favorite 'Felt moment' : Getting on a Felt TT bike for the 1st time. I had no idea what I was doing, except I felt fast and that was all that mattered.

Training tip : Failing to prepare is preparing to fail.

Best race day advice : All you have to remember is that all the hard work is done when you get on the start line. Racing is the easy part.

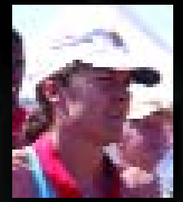

BECKY LAVELLE – DA/F1 RIDER
PROFESSIONAL TRIATHLETE

Favorite 'Felt moment'' : Meeting Jim Felt for the first time at a race and not even realizing who I was talking to! We've stuck together ever since!

Training tip : On key training days, train how you want to race... if you don't push yourself past your limits in training, you won't be able to do it in a race.

Best race day advice : Go hard, have fun and never give up!

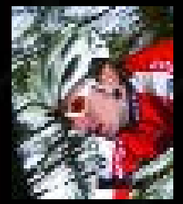

SEAMUS McGRATH – VIRTUE ONE, RXC TEAM RIDER
PROFESSIONAL MOUNTAIN BIKER

Favorite 'Felt moment' : Riding my RXC Team to 5th place at the Mt. St. Anne world cup in front of my family and friends!

Training tip : Be smart and listen to your body.

Best race day advice : Be calm and eat a big breakfast!

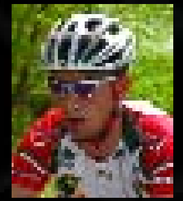

DAVIDE FRATTINI – F1, DA RIDER
COLAVITA-SUTTER HOME PROFESSIONAL RACING TEAM

Favorite 'Felt moment' : When I picked up my new F1 at training camp I couldn't believe how light and stiff it felt. I grinned from ear to ear!

Training tip : Recovery rides are as important as the most intense interval workouts.

Best race day advice : Find a pre-race routine that works and stick with it. Your pre-race meal is as important as your warm up so eat what works for you.

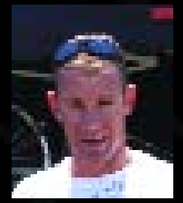

CRAIG WALTON – DA/F1 RIDER
PROFESSIONAL TRIATHLETE

Favorite 'Felt moment' : Descending down a hill at the Noosa triathlon and hitting 103km per hour on my Felt Time Trial Bike.

Training tip : Consistency is the key.

Best race day advice : Relax, enjoy and race like you have nothing to lose!

ANDY POTTS – DA/F1 RIDER
PROFESSIONAL TRIATHLETE

Favorite 'Felt moment' : When Felt decided to sponsor me and I got my first bike. Some people say that it is the rider that makes the bike and most of the time that is true, but it never hurts to have one of the best bikes on the road to really make that point stick.

Training tip : There is no substitute for hard work and that is exactly what I prescribe to improve.

Best race day advice : Give yourself plenty of time pre-race to get yourself situated and get warmed up properly – and enjoy your race!