General Safety Information

⚠ WARNING

– To avoid serious injuries:

- Obtain and read the service instructions carefully prior to installing the parts. Loose, worn, or damaged parts may cause serious injury to the rider.
  We strongly recommend only using genuine Shimano replacement parts.
- It is important to completely understand the operation of your bicycle's brake system. Improper use of your bicycle's brake system may result in a loss of control or an accident, which could lead to severe injury. Because each bicycle may handle differently, be sure to learn the proper braking technique (including brake lever pressure and bicycle control characteristics) and operation of your bicycle. This can be done by consulting your professional bicycle dealer and the bicycle's owners manual, and by practicing your riding and braking technique.
- These brake levers are equipped with a mode switching mechanism to make them compatible with cantilever brakes and Roller Brakes or V-Brakes with power modulator.

If the incorrect mode is selected it may cause either excessive or insufficient braking force to occur, which could result in dangerous accidents.
Be sure to select the mode in accordance with the instructions given in the table below.

Mode position	Applicable brake
C/R position 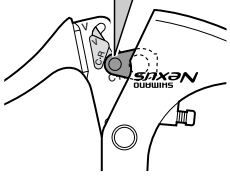 The C indicates the mode position for compatibility with cantilever brakes. The R indicates the mode position for compatibility with Roller Brakes.	• Cantilever brakes • Roller Brakes
V position 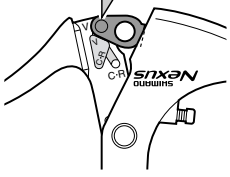 The V indicates the mode position for compatibility with V-Brakes with power modulator.	• V-Brakes with power modulator

Use the brake levers with mode switching mechanism in the combinations given above.

- Read these Technical Service Instructions carefully, and keep them in a safe place for later reference.

⚠ CAUTION

– To avoid serious injuries:

Be sure to shift the lever one gear at a time, and reduce the force being applied to the pedals during shifting. If you try to force operation of the shifting lever while the pedals are being turned strongly, your feet may come off the pedals and the bicycle may topple over, which could result in serious injury.

NOTE:

- For maximum performance we highly recommend Shimano lubricants and maintenance products.
- Parts are not guaranteed against natural wear or deterioration resulting from normal use.

SI-6FD0A

SL-8S20	Revo-shift Lever
BL-IM65	Brake Lever
CJ-8S20	Cassette Joint

Technical Service Instructions

SHIMANO Nexus

INTER•S

Be sure to read these service instructions in conjunction with the service instructions for the Inter-8 hub before use.

Revo-shift lever operation

Turn the Revo-shift lever to shift to each of the eight gears.

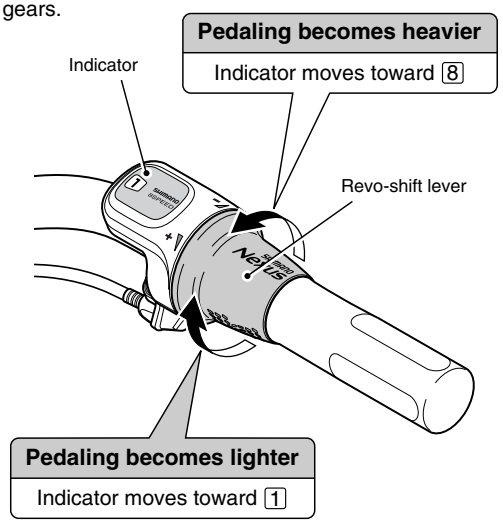

Installation of the lever

Install the lever as shown in the illustration.

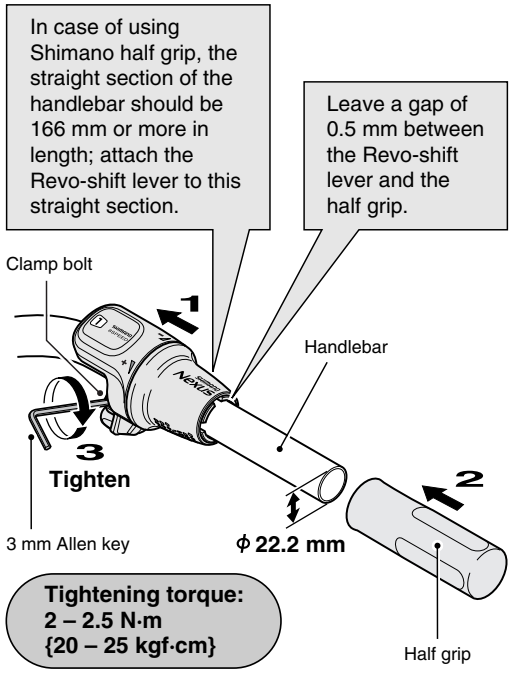

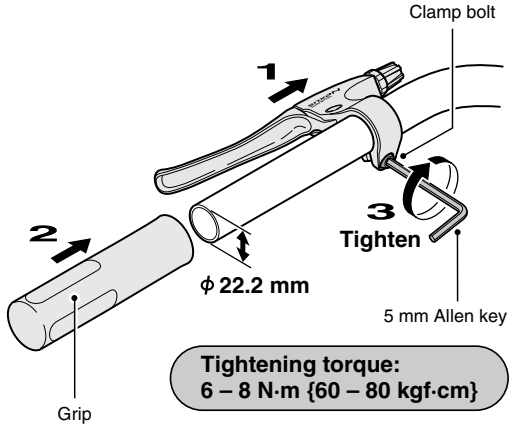

Disconnecting the shifting cable when removing the rear wheel from the frame

Disconnect the cable from the cassette joint when removing the rear wheel from the frame.

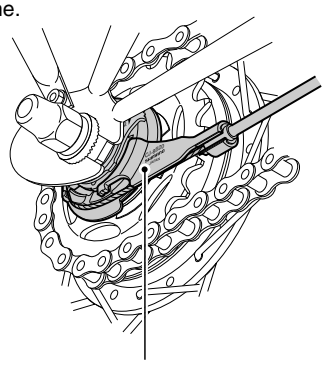

1. Set the Revo-shift lever to 1.

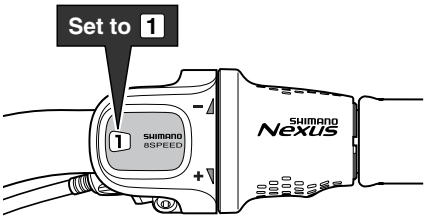

2. Pull the outer casing out from the outer casing holder of the cassette joint, and then remove the inner cable from the slit in the bracket.

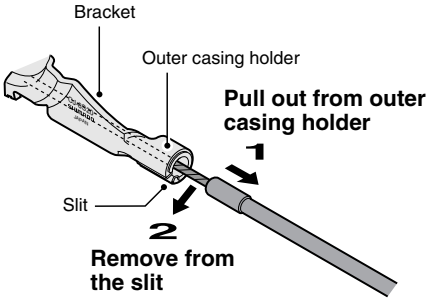

3. Remove the inner cable fixing bolt unit from the cassette joint pulley.

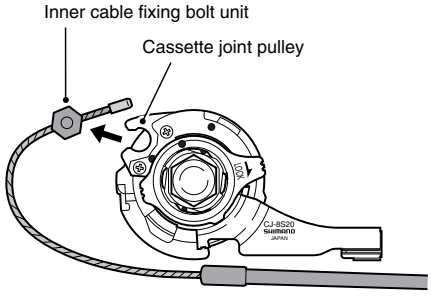

If it is difficult to pull the outer casing out from the outer casing holder of the cassette joint, insert a 2 mm Allen key or a #14 spoke into the hole in the cassette joint pulley, and then turn the pulley to loosen the inner cable. Then remove the inner cable fixing bolt unit from the pulley first, and after this remove the outer casing from the outer casing holder.

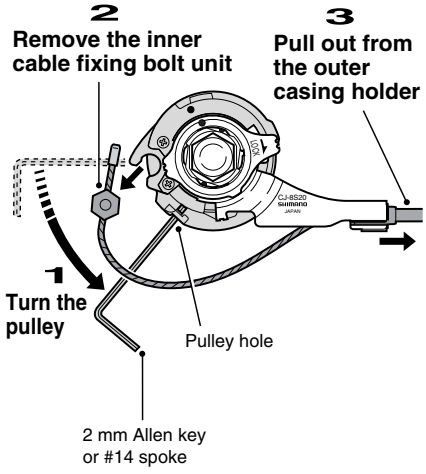

Note:
If reusing the cable, refer to steps 7 to 9 in "Installation of the shifting cable".

Installation of the shifting cable

Use a shifting cable with one inner cable drum.

Cable with one inner cable drum / SIS-SP40 (4 mm dia.)

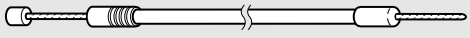

1. Set the Revo-shift lever to 1.

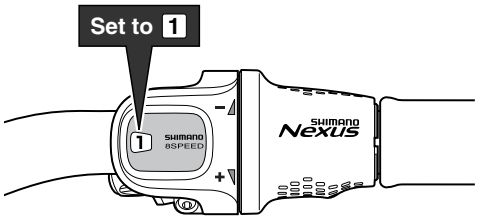

■ Revo-shift lever side

2. Loosen the cover fixing screw, and then remove the upper cover.

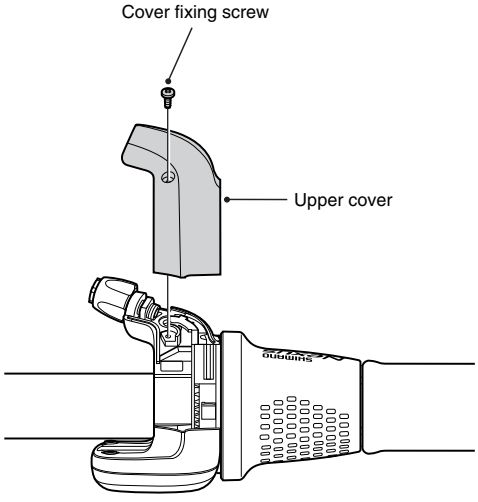

3. Pass the inner cable from the hole in the winder unit through the hole in the cable adjustment bolt. Next, insert the inner cable into the groove of the cable guide, and pull the inner cable so that the inner cable drum fits into the recess in the winder unit.

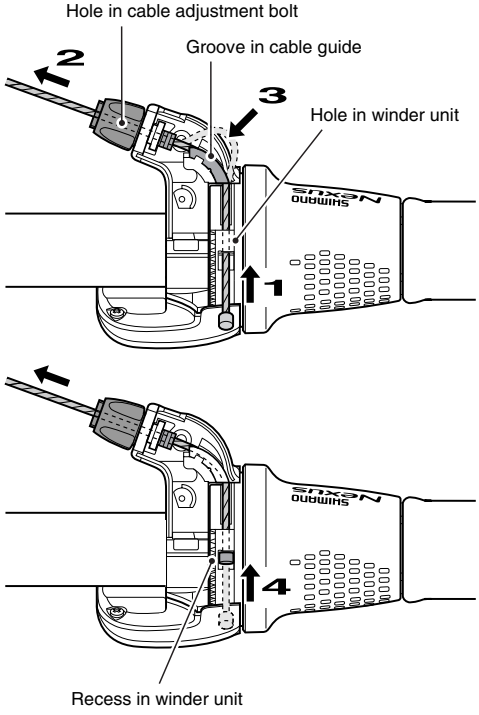

4. Replace the upper cover and tighten the cover fixing screw.

Tightening torque:
0.1 – 0.2 N·m {1 – 2 kgf·cm}

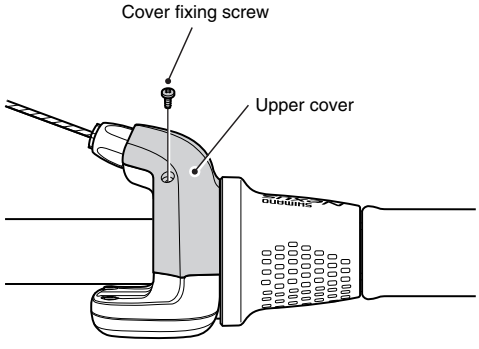

5. Pass the inner cable through the SIS-SP40 outer casing through the end with the plastic cap.

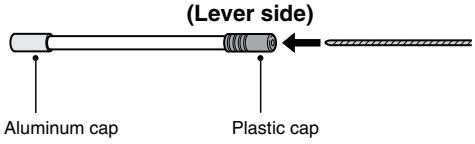

If cutting the outer casing, cut it near the end with the plastic cap while the cap is still attached. Then make the cut end perfectly round and attach the plastic cap.

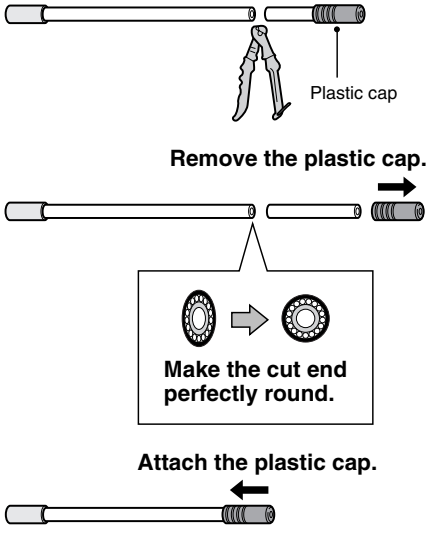

■ Cassette joint side

6. After checking that the end of the outer casing is sitting securely in the cable adjustment bolt of the Revo-shift lever, attach the inner cable fixing bolt unit to the inner cable.

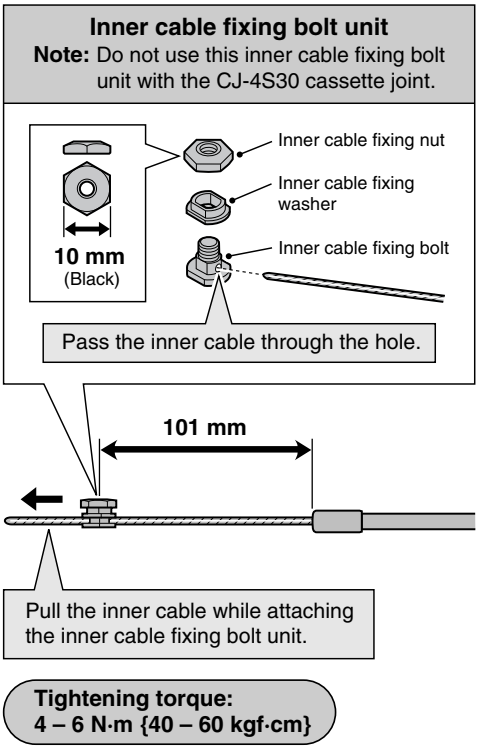

7. Bring the cable around to the cassette joint pulley, hold so that the inner cable fixing nut is facing to the outside (toward the fork end), and then slide the flats part of the inner cable fixing washer into the gap in the pulley.

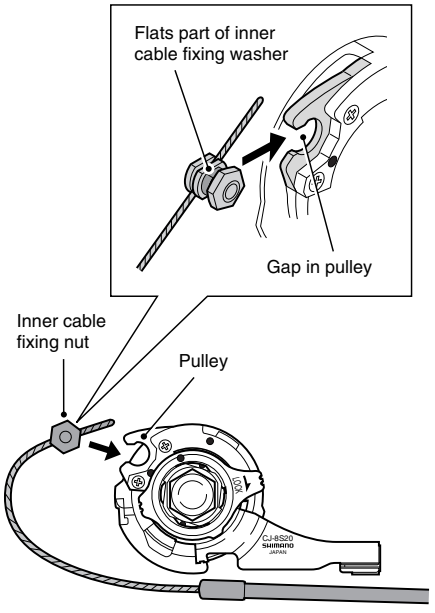

8. Turn the cable 60° counterclockwise and attach it to the hook.

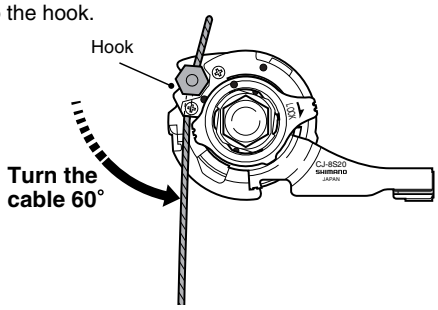

9. Attach the inner cable to the pulley as shown in the illustration, pass the inner cable through the slit in the cassette joint bracket, and then insert the end of the outer casing securely into the outer casing holder.

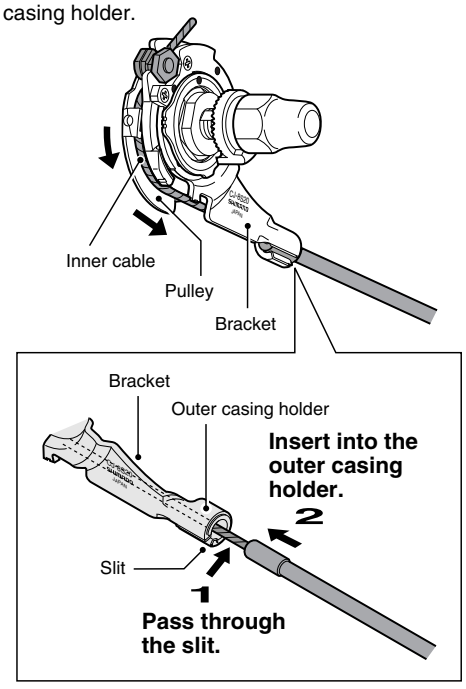

If first inserting the outer casing into the outer casing holder is easier, then first insert the outer casing into the outer casing holder, and then insert a 2 mm Allen key or a #14 spoke into the hole in the cassette joint pulley, and then turn the pulley so that the inner cable fixing bolt unit fits into the gap in the pulley.

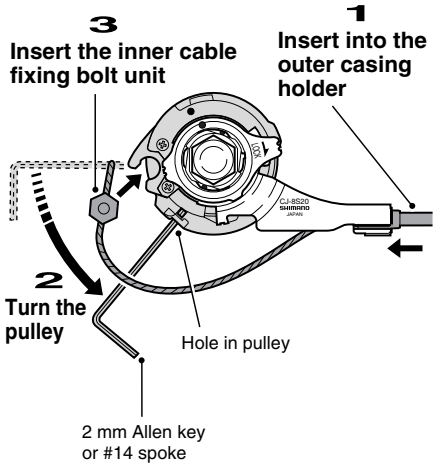

Note:
Check that the inner cable is correctly seated inside the pulley guide.

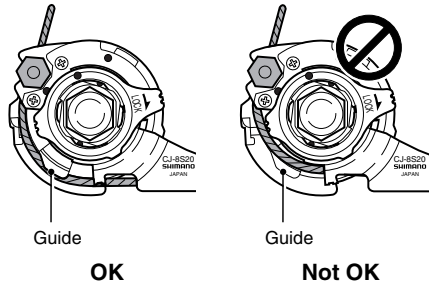

10. Secure the cable to the frame with the outer casing bands.

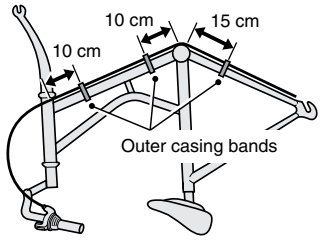

Adjusting the cassette joint

1. Set the Revo-shift lever to 4.
Check to be sure that the yellow setting lines on the cassette joint bracket and pulley are aligned at this time.

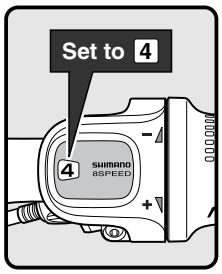

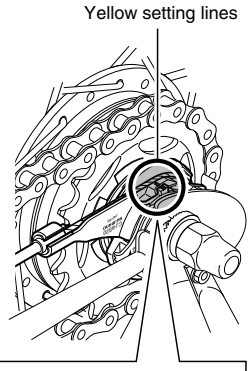

The yellow setting lines on the cassette joint are located in two places. Use the one that is easiest to see.

When bicycle is standing up

Should be straight

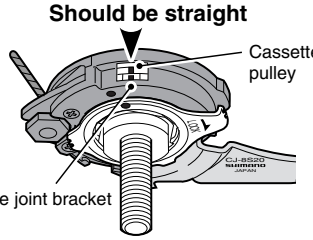

When bicycle is upside down

Should be straight

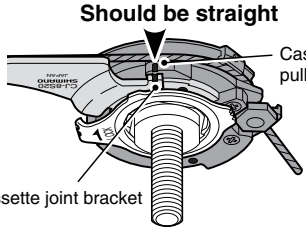

If the yellow setting lines are not aligned, turn the cable adjustment bolt of the Revo-shift lever to align the setting lines. After this, move the Revo-shift lever once more from 4 to 1 and then back to 4, and then re-check to be sure that the yellow setting lines are aligned.

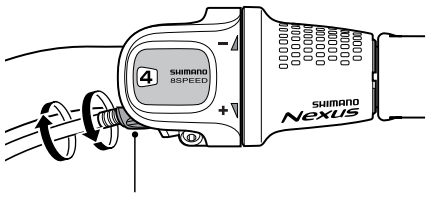

2. After adjusting the cassette joint, cut off the excess length of inner cable and then install the inner end cap.

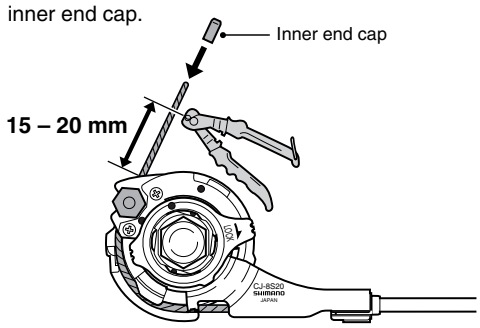

These service instructions explain how to use and maintain the Shimano bicycle parts which have been used on your new bicycle. For any questions regarding your bicycle or other matters which are not related to Shimano parts, please contact the place of purchase or the bicycle manufacturer.

Please note: Specifications are subject to change for improvement without notice. (English)

SHIMANO®

SHIMANO AMERICAN CORPORATION
One Holland, Irvine, California 92618, U.S.A. Phone: +1-949-951-5003

SHIMANO EUROPE HOLDING B.V.
Industrieweg 24, 8071 CT Nunspeet, The Netherlands Phone: +31-341-272222

SHIMANO INC.
3-77 Oimatsu-cho, Sakai, Osaka 590-8577, Japan

© Apr. 2004 by Shimano Inc. PIT. SZK. Printed in Singapore